Turtle pump

Features and Strengths

Highly operational reliability despite fluctuating or low compressed-air pressure
Integrated pleated filter with high dirt capacity & Auto-cleaning system

Advantages

Excellent performance in most of every automation application – Especially, dust environment application
Reliable and stable operation - High vacuum level and vacuum flow in efficient air consumption
Optional Air-saving kit (AS-KIT) to minimize energy consumption

Application

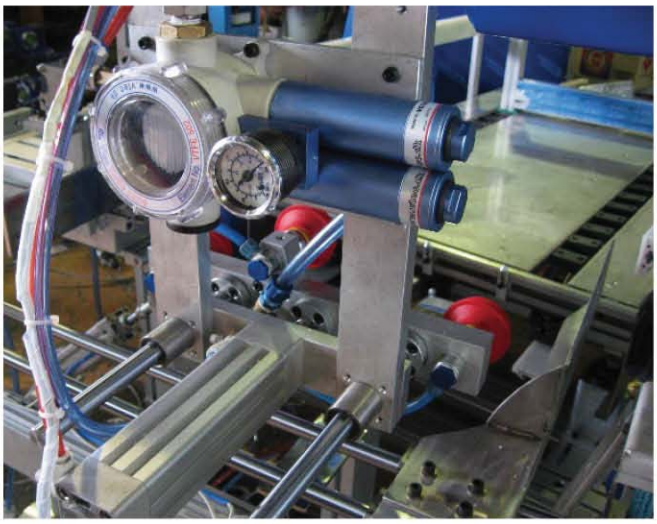

Overall of specification

Model	Max. Vacuum level (- kPa)	Max. Feed Pressure (bar)	Max. Vacuum Flow (Nl/m)	Air Consumption (Nl/m)
VTC3021	92	7	171	152
VTC3031	92	7	341	152
VTCL3021	75	7	200	104
VTCL3031	75	7	362	104
VTC3022	92	7	342	304
VTC3032	92	7	682	304
VTCL3022	75	7	400	208
VTCL3032	75	7	724	208
VTC3122	92	7	342	304
VTC3123	92	7	513	456
VTC3124	92	7	684	608
VTC3132	92	7	682	304
VTC3133	92	7	1023	456
VTC3134	92	7	1364	608
VTCL3122	75	7	400	208
VTCL3123	75	7	600	312
VTCL3124	75	7	800	416
VTCL3132	75	7	724	208
VTCL3133	75	7	1086	312
VTCL3134	75	7	1448	416

Turtle pump

Energy Saving

VMECA Turtle pump with integral vacuum filter and silencer can be combined with the optional vacuum On/Off control valve, vacuum release valve and vacuum switch to create an optimal vacuum solution for many
applications. VMECA Turtle pump and optional components, due to the compact design and size, can be mounted close to the point of use reducing system volume and maintenance while improving cycle time.
With pleated filter media integrated the filter has high dirt holding capacity, while Turtle pump has very fast evacuation time by optimized internal housing volume.

Key advantages

- VMECA vacuum cartridge integrated
- Vacuum filter self cleaning system
- All-in-one in compact design

VMECA air control valve
- Single or Double solenoid valve

VMECA vacuum filter
- Prevents dust coming into the pump
- Pleated media for high dirt holding capacity
- Moisture, oil resistant
- Washable

VMECA vacuum gauge or sensor
- Indicates vacuum level
- Digital output signal when set vacuum level is achieved

VMECA free-flow silencer
- Assures low noise level
- Free air flow design to minimize vacuum loss due to back flow
- No dust collection

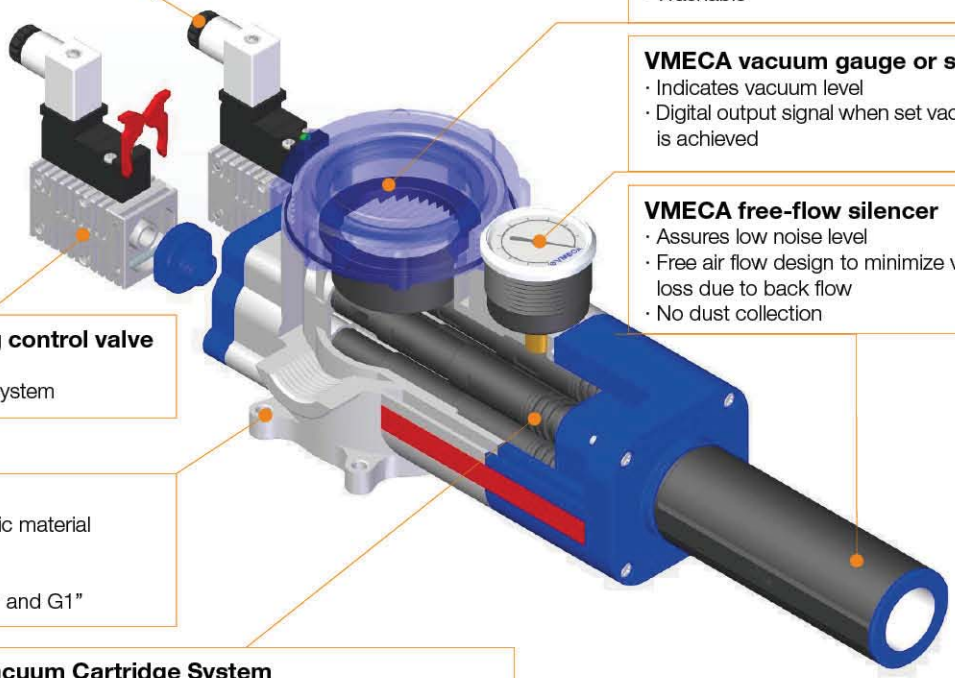

VMECA Auto cleaning control valve
- Quick vacuum release
- Automatic filter cleaning system

Body
- Durable engineering plastic material
- Corrosion resistant
- Light weight
- Two vacuum ports: G3/4" and G1"

VMECA® patented Vacuum Cartridge System
- Multiple Vacuum cartridge available up to 4pcs
- High operational reliability despite fluctuating or low compressed air pressure
- Air-Saving(AS) kit available to minimize energy consumption (about 20times less)
- Easily mountable and interchangeable vacuum cartridge

Comparison of vacuum flow & level at running time

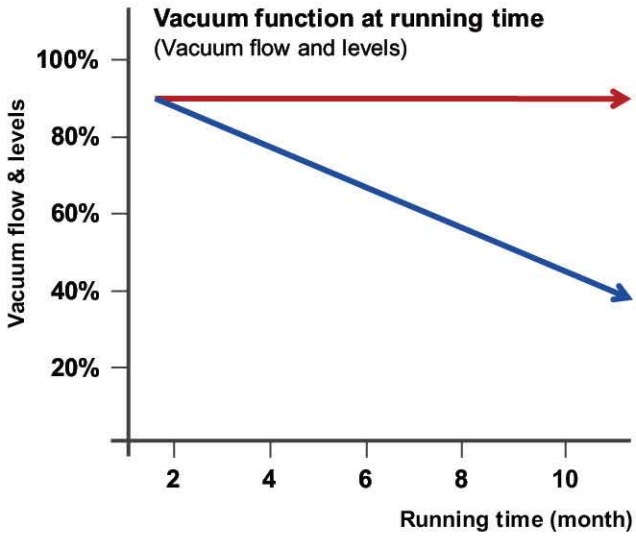

- Automatic filter cleaning system eliminates drop of vacuum flow and vacuum level
- Reduce the down time and save cost with reliable performance

- Drop of vacuum flow and level easily due to filter surface blocked by dust according as the running time
- Periodic filter cleaning required

VMECA Turtle pump (Improved system) — Typical Classic pump (Old system)

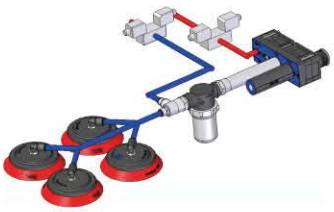

Comparison of vacuum level at different feed pressure

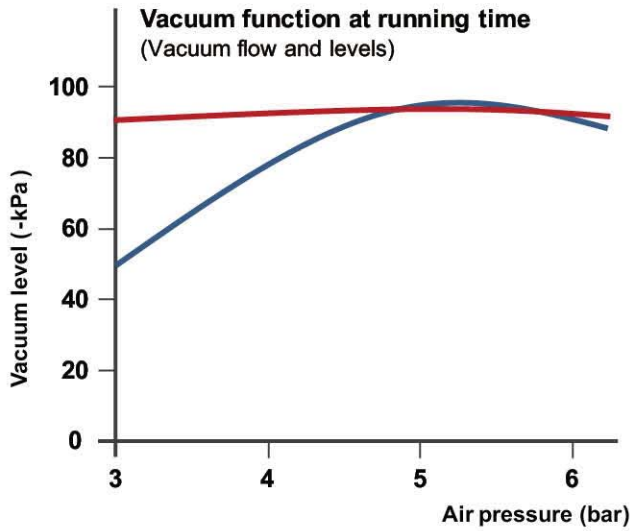

- High operational reliability despite fluctuating or low compressed air pressure(Vacuum level ±2%)
- Unstable vacuum level by air fluctuating and big dropped vacuum level in low compressed air pressure

VMECA Turtle pump (Improved system) — Typical Classic pump (Old system)

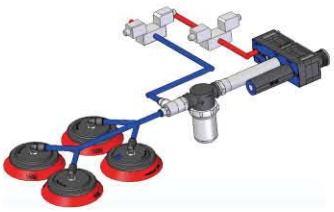

VTC3031 / VTCL3031

Features and Strengths

- Highly operational reliability despite fluctuating or low compressed-air pressure
- Integrated pleated filter with high dirt capacity & Auto-cleaning system
- Optional Air-Saving Kit available to minimize energy consumption
- Quick response time
- Patented design

Specifications

Description	VTC3031	VTCL3031
Max. Vacuum level	-92 kPa	-75 kPa
Open Vacuum flow	341 Nl/min	362 Nl/min
Max. Feed pressure	7 bar	7 bar
Temperature	-20 ~ 80 °C	-20 ~ 80 °C
Noise level	50 ~ 60 dbA	50 ~ 60 dbA
Weight	412 g	411 g

Vacuum Flow

Model	Max. vacuum (-kPa)	Feed Pressure (bar)	Vacuum flow (Nl/min) at different vacuum levels (-kPa)									
			0	10	20	30	40	50	60	70	80	90
VTC3031	75	2.2	302	123	88	53	31	29	17	5	-	-
	92	3.0	338	152	106	64	33	32	22	17	6	2
	92	4.0	341	154	128	94	69	43	23	17	7	2
VTCL3031	60	4.0	302	176	110	70	46	28	7	-	-	-
	70	5.0	344	200	130	82	50	38	23	11	-	-
	75	6.0	362	194	154	100	52	38	32	22	-	-

Evacuation Time

Model	Feed Pressure (bar)	Air Consumption (Nl/min)	Evacuation time in sec / liter to reach different vacuum levels (-kPa)								
			10	20	30	40	50	60	70	80	90
VTC3031	2.2	97	0.02	0.09	0.1	0.32	0.42	0.73	1.62	-	-
	3	118	0.02	0.07	0.18	0.28	0.38	0.64	0.8	1.2	3.8
	4	152	0.01	0.05	0.07	0.09	0.2	0.42	0.6	1	3.4
VTCL3031	4	70	0.03	0.09	0.17	0.29	0.38	0.8	-	-	-
	5	85	0.01	0.08	0.15	0.25	0.3	0.4	0.8	-	-
	6	104	0.01	0.07	0.12	0.2	0.28	0.36	0.6	-	-

Dimension – Basic Pump

[Unit : mm]

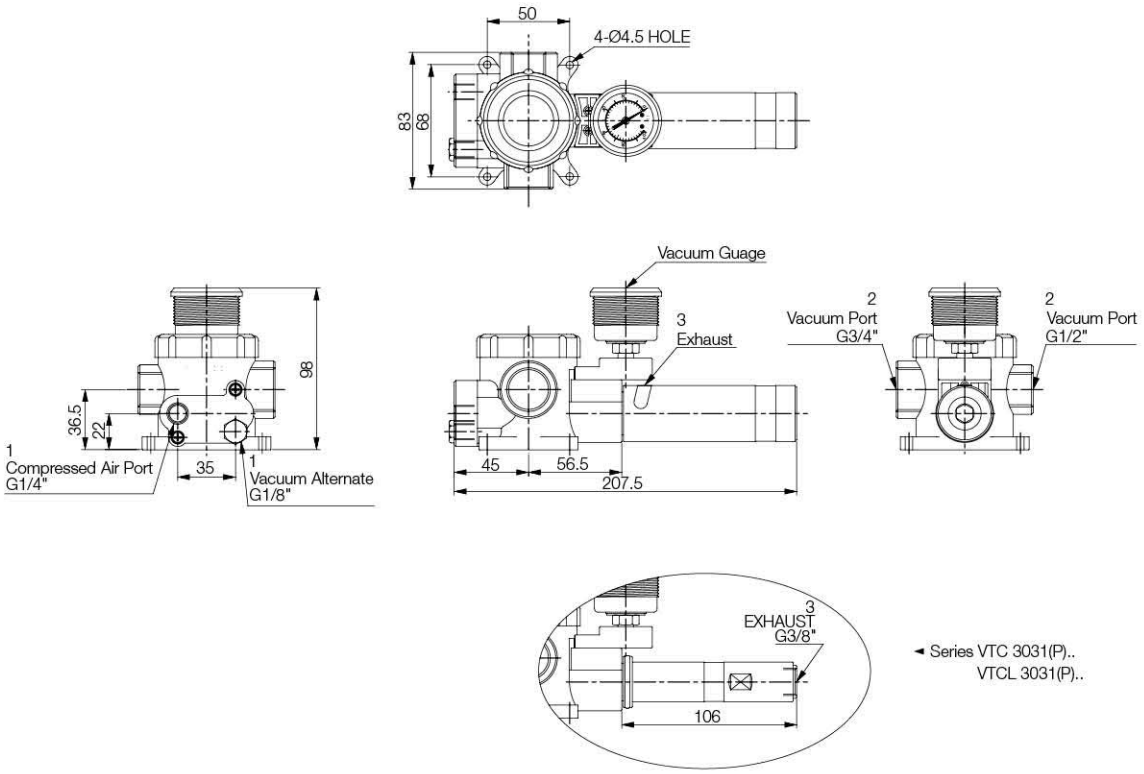

Dimensions – with Accessories

[Unit : mm]

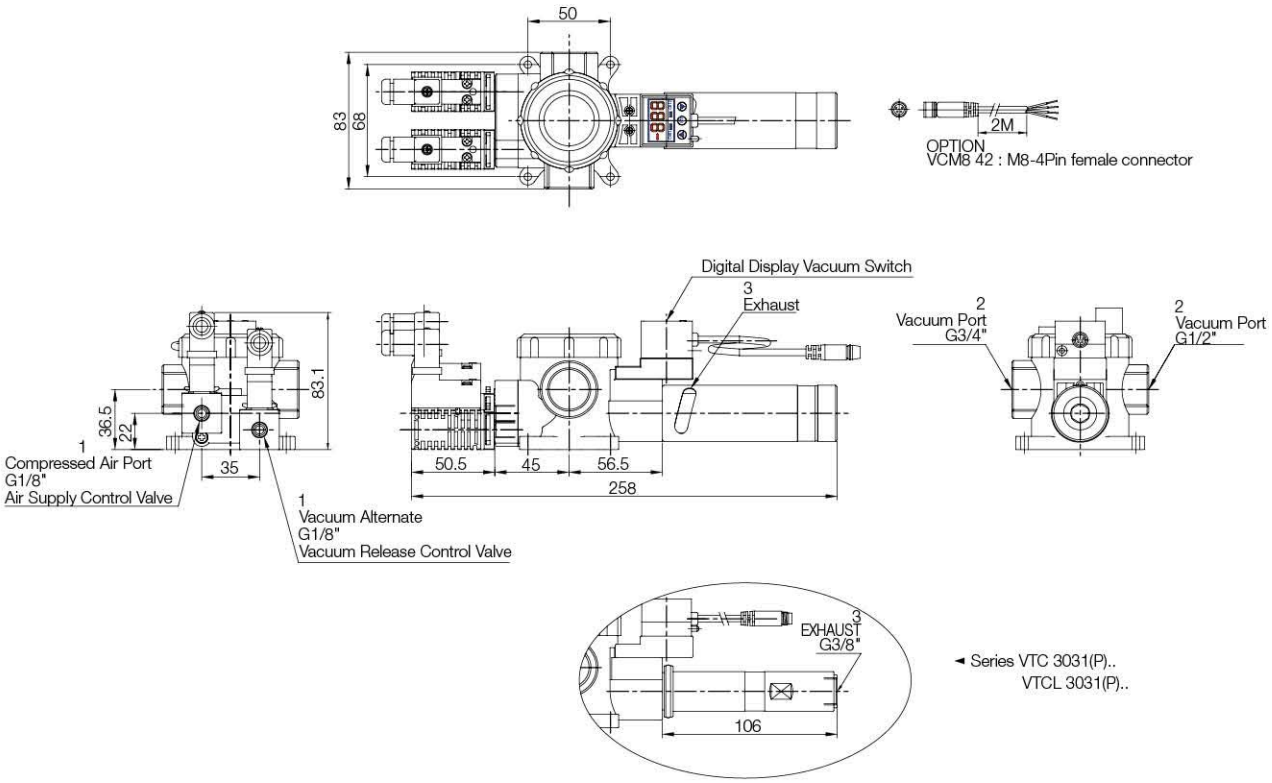

VTC3021 / VTCL3021

Features and Strengths

- Highly operational reliability despite fluctuating or low compressed-air pressure
- Integrated pleated filter with high dirt capacity & Auto-cleaning system
- Optional Air-Saving Kit available to minimize energy consumption
- Quick response time
- Patented design

Specifications

Description	VTC3021	VTCL3021
Max. Vacuum level	-92 kPa	-75 kPa
Open Vacuum flow	171 Nl/min	200 Nl/min
Max. Feed pressure	7 bar	7 bar
Temperature	-20 ~ 80 °C	-20 ~ 80 °C
Noise level	50 ~ 60 dbA	50 ~ 60 dbA
Weight	317 g	316 g

Vacuum Flow

Model	Max. vacuum (-kPa)	Feed Pressure (bar)	Vacuum flow (Nl/min) at different vacuum levels (-kPa)									
			0	10	20	30	40	50	60	70	80	90
VTC3021	75	2.2	164	122.5	88	53	31.4	28.5	16.5	4.6	-	-
	92	3.0	170	152	106	64	33	32	22	16.5	6.4	1.9
	92	4.0	171	154	127.5	94	69	43	23.3	17.3	6.9	2.1
VTCL3021	60	4.0	188	158	110	70	46	28	6.8	-	-	-
	70	5.0	195	176	130	82	50	37.5	23	11.3	-	-
	75	6.0	200	183	154	100	52	38	32	22	-	-

Evacuation Time

Model	Feed Pressure (bar)	Air Consumption (Nl/min)	Evacuation time in sec / liter to reach different vacuum levels (-kPa)								
			10	20	30	40	50	60	70	80	90
VTC3021	2.2	97	0.03	0.12	0.21	0.38	0.47	0.73	1.62	-	-
	3.0	118	0.027	0.1	0.19	0.3	0.4	0.64	0.8	1.2	3.8
	4.0	152	0.026	0.058	0.09	0.1	0.25	0.5	0.69	1.05	3.5
VTCL3021	4.0	70	0.035	0.009	0.17	0.29	0.38	0.85	-	-	-
	5.0	85	0.027	0.088	0.15	0.25	0.3	0.4	0.82	-	-
	6.0	104	0.028	0.08	0.12	0.2	0.28	0.36	0.63	-	-

Dimension – Basic Pump

[Unit : mm]

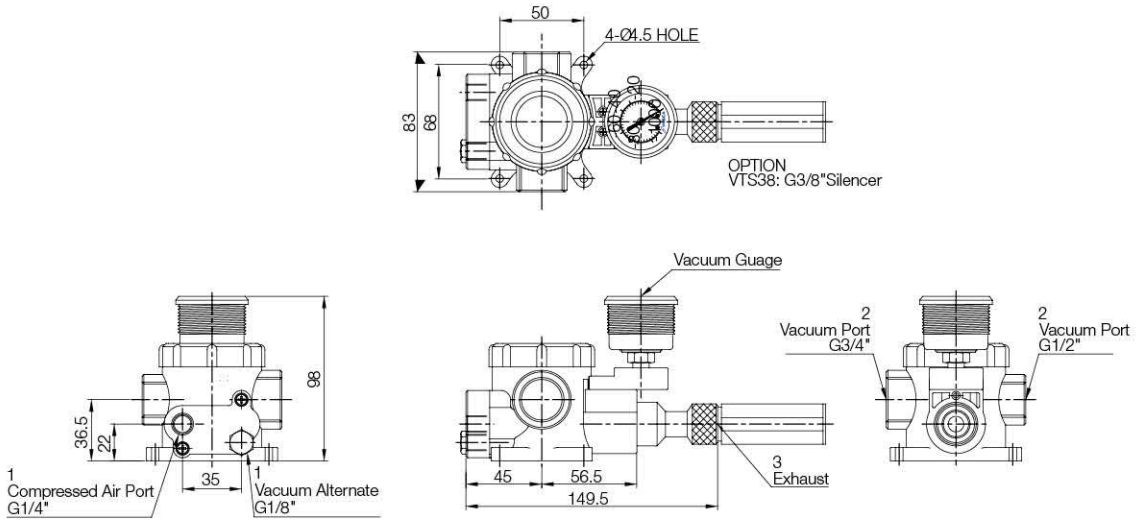

Dimensions – with Accessories

[Unit : mm]

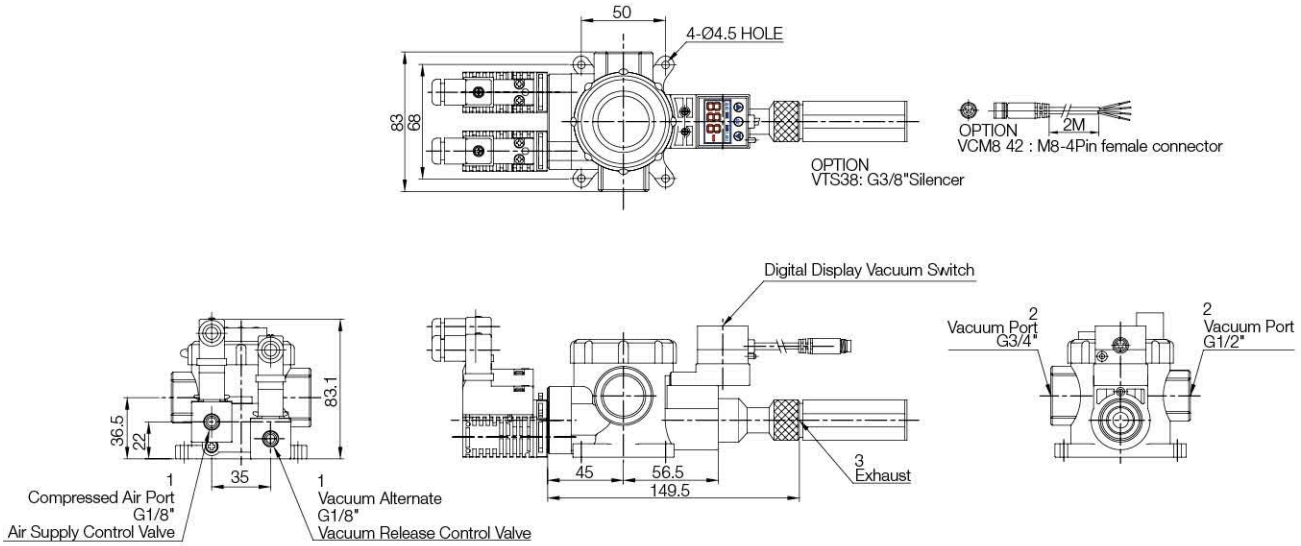

Performance data

VTC3031

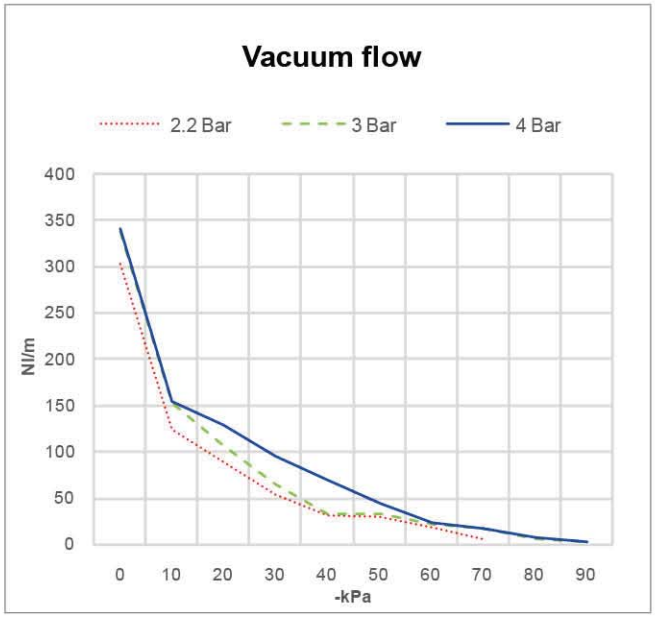

※ Vacuum flow at different vacuum level

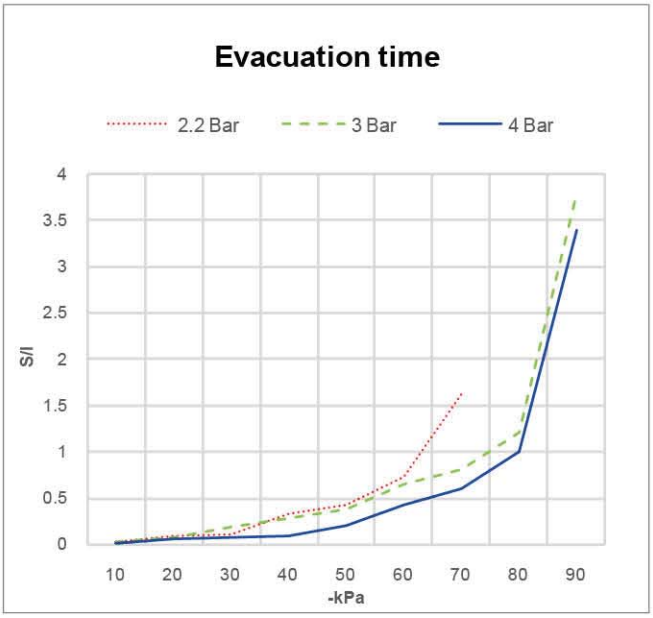

※ Time to evacuate a volume at different vacuum level

VTCL3031

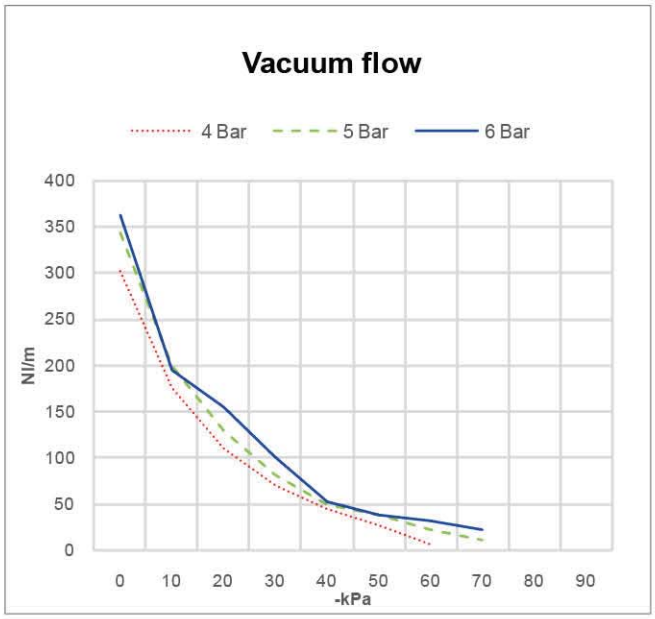

※ Vacuum flow at different vacuum level

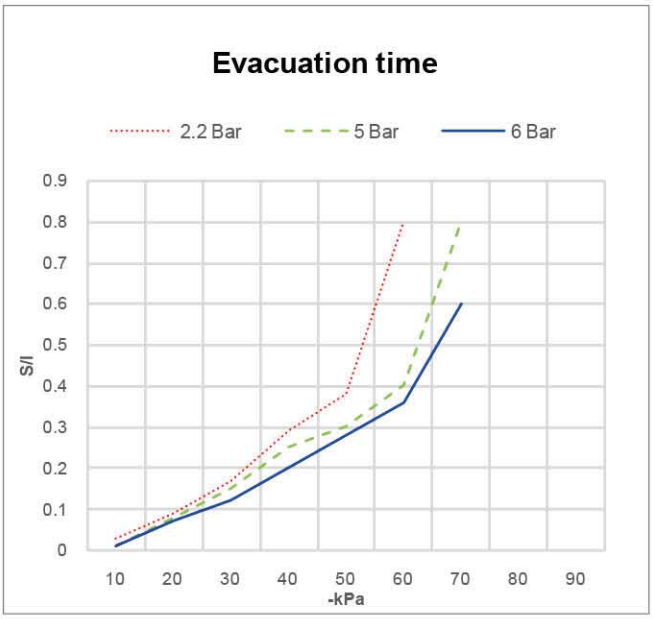

※ Time to evacuate a volume at different vacuum level

Performance data

VTC3021

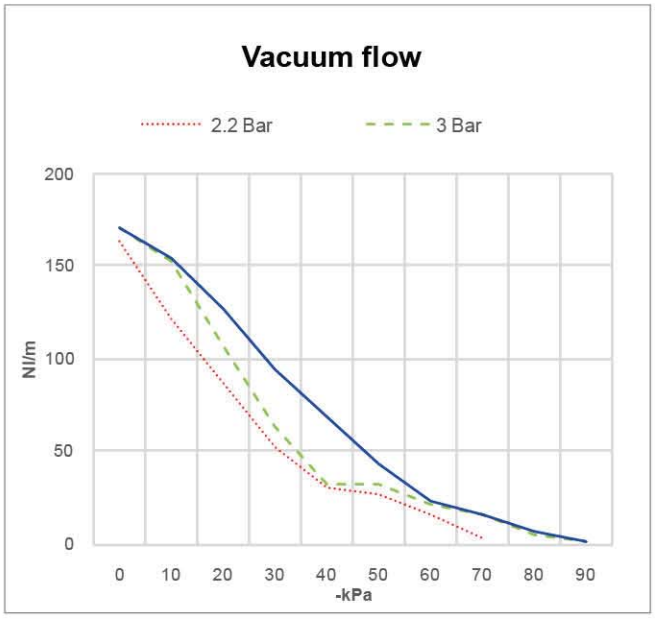

※ Vacuum flow at different vacuum level

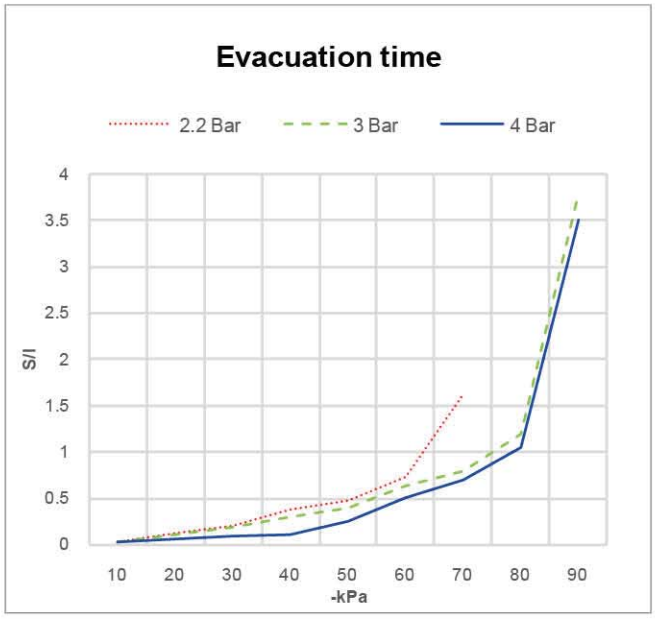

※ Time to evacuate a volume at different vacuum level

VTCL3021

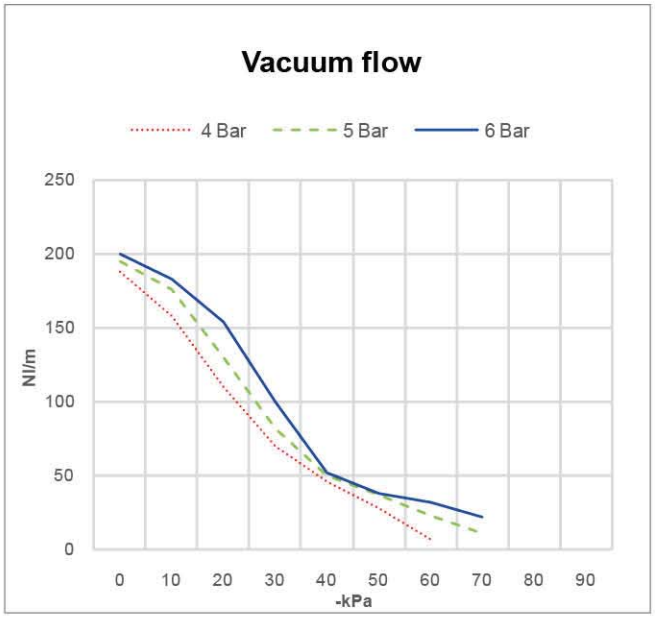

※ Vacuum flow at different vacuum level

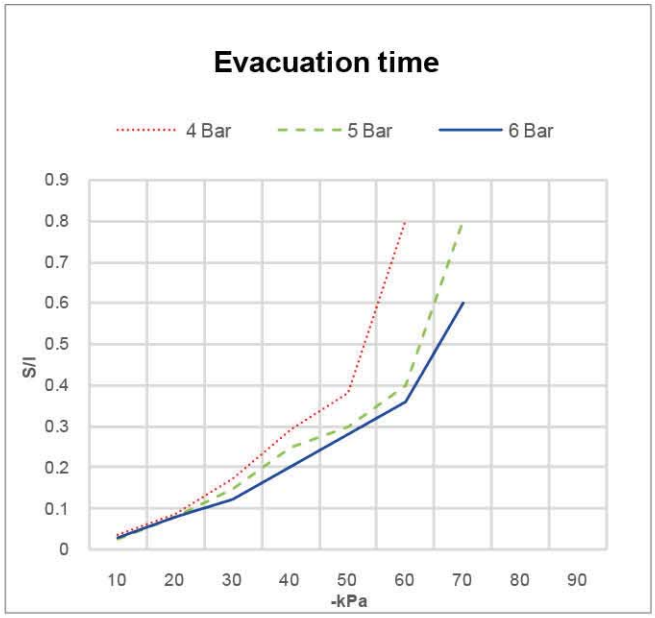

※ Time to evacuate a volume at different vacuum level

VTC3032 / VTCL3032

Features and Strengths

- Highly operational reliability despite fluctuating or low compressed-air pressure
- Integrated pleated filter with high dirt capacity & Auto-cleaning system
- Optional Air-Saving Kit available to minimize energy consumption
- Quick response time
- Patented design

Specifications

Description	VTC3032	VTCL3032
Max. Vacuum level	-92 kPa	-75 kPa
Open Vacuum flow	682 Nl/min	724 Nl/min
Max. Feed pressure	7 bar	7 bar
Temperature	-20 ~ 80 °C	-20 ~ 80 °C
Noise level	50 ~ 60 dbA	50 ~ 60 dbA
Weight	671 g	670 g

Vacuum Flow

Model	Max. vacuum (-kPa)	Feed Pressure (bar)	Vacuum flow (Nl/min) at different vacuum levels (-kPa)									
			0	10	20	30	40	50	60	70	80	90
VTC3032	75	2.2	604	245	176	106	62.8	57	33	92	-	-
	92	3.0	676	304	212	128	66	64	44	33	12.8	3.8
	92	4.0	682	308	255	188	138	86	46.6	34.6	13.8	4.2
VTCL3032	60	4.0	604	352	220	140	92	56	13.6	-	-	-
	70	5.0	688	392	260	164	100	75	46	23.8	-	-
	75	6.0	724	415	308	200	104	76	64	44	-	-

Evacuation Time

Model	Feed Pressure (bar)	Air Consumption (Nl/min)	Evacuation time in sec / liter to reach different vacuum levels (-kPa)								
			10	20	30	40	50	60	70	80	90
VTC3032	2.2	97	0.02	0.09	0.10	0.32	0.42	0.73	1.62	-	-
	3.0	118	0.02	0.07	0.18	0.28	0.38	0.64	0.80	1.20	3.80
	4.0	152	0.01	0.05	0.07	0.09	0.20	0.42	0.60	1.00	3.40
VTCL3032	4.0	70	0.03	0.084	0.167	0.24	0.35	0.43	-	-	-
	5.0	85	0.01	0.08	0.14	0.20	0.27	0.43	0.80	-	-
	6.0	104	0.01	0.07	0.10	0.198	0.21	0.32	0.60	-	-

Dimension – Basic Pump

[Unit : mm]

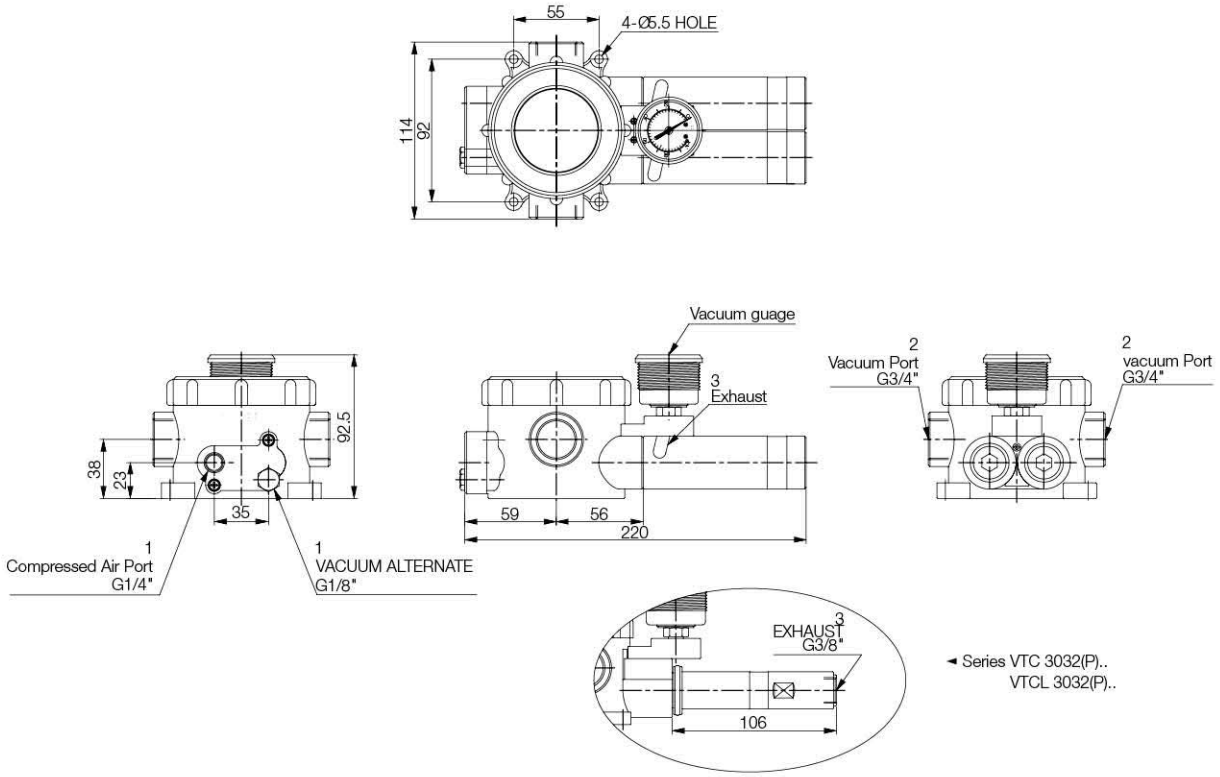

Dimensions – with Accessories

[Unit : mm]

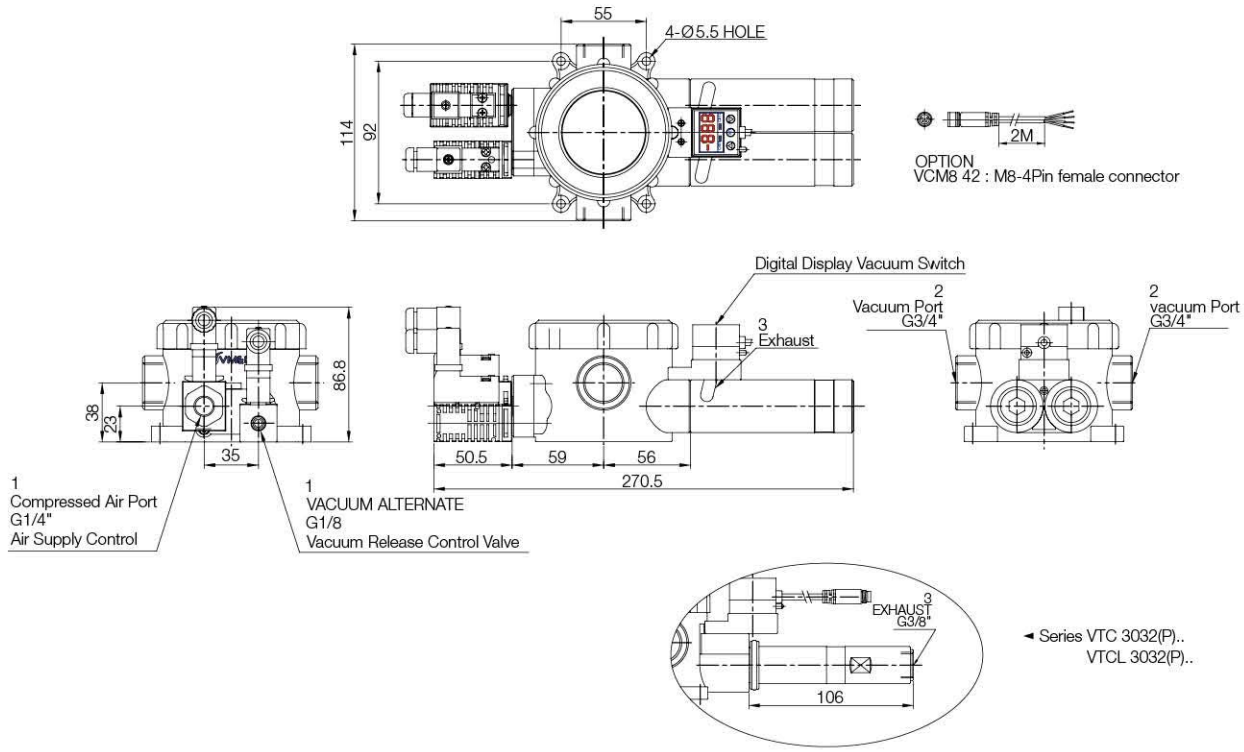

VTC3022 / VTCL3022

Features and Strengths

- Highly operational reliability despite fluctuating or low compressed-air pressure
- Integrated pleated filter with high dirt capacity & Auto-cleaning system
- Optional Air-Saving Kit available to minimize energy consumption
- Quick response time
- Patented design

Specifications

Description	VTC3022	VTCL3022
Max. Vacuum level	-92 kPa	-75 kPa
Open Vacuum flow	342 Nl/min	400 Nl/min
Max. Feed pressure	7 bar	7 bar
Temperature	-20 ~ 80 °C	-20 ~ 80 °C
Noise level	50 ~ 60 dbA	50 ~ 60 dbA
Weight	555 g	555 g

Vacuum Flow

Model	Max. vacuum (-kPa)	Feed Pressure (bar)	Vacuum flow (Nl/min) at different vacuum levels (-kPa)									
			0	10	20	30	40	50	60	70	80	90
VTC3022	75	2.2	328	245	176	106	62.8	57	33	9.2	-	-
	92	3.0	340	304	212	128	66	64	44	33	12.8	3.8
	92	4.0	342	308	255	188	138	86	46.6	34.6	13.8	4.2
VTCL3022	60	4.0	376	316	220	140	92	56	13.6	-	-	-
	70	5.0	390	352	260	164	100	75	46	23.8	-	-
	75	6.0	400	366	308	200	104	76	64	44	-	-

Evacuation Time

Model	Feed Pressure (bar)	Air Consumption (Nl/min)	Evacuation time in sec / liter to reach different vacuum levels (-kPa)								
			10	20	30	40	50	60	70	80	90
VTC3022	2.2	194	0.011	0.043	0.050	0.170	0.230	0.380	0.810	-	-
	3	236	0.010	0.032	0.055	0.150	0.220	0.330	0.480	0.780	1.980
	4	304	0.010	0.026	0.037	0.047	0.120	0.230	0.350	0.700	1.720
VTCL3022	4	140	0.013	0.037	0.073	0.140	0.190	0.450	-	-	-
	5	170	0.009	0.032	0.060	0.128	0.160	0.250	0.430	-	-
	6	208	0.006	0.030	0.047	0.098	0.150	0.200	0.320	-	-

Dimension – Basic Pump

[Unit : mm]

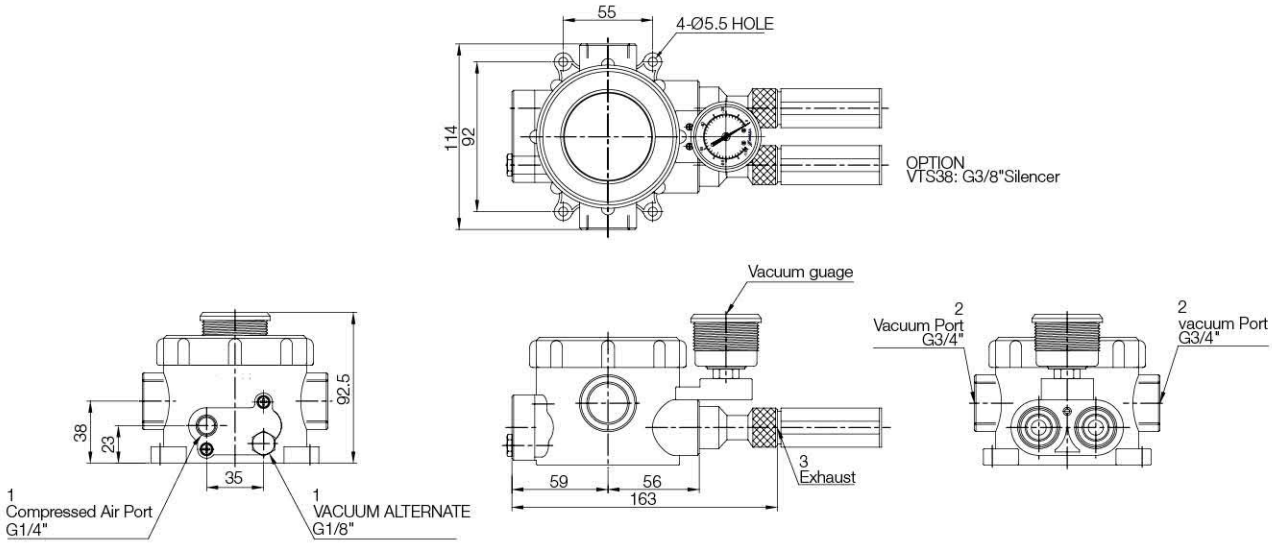

Dimensions – with Accessories

[Unit : mm]

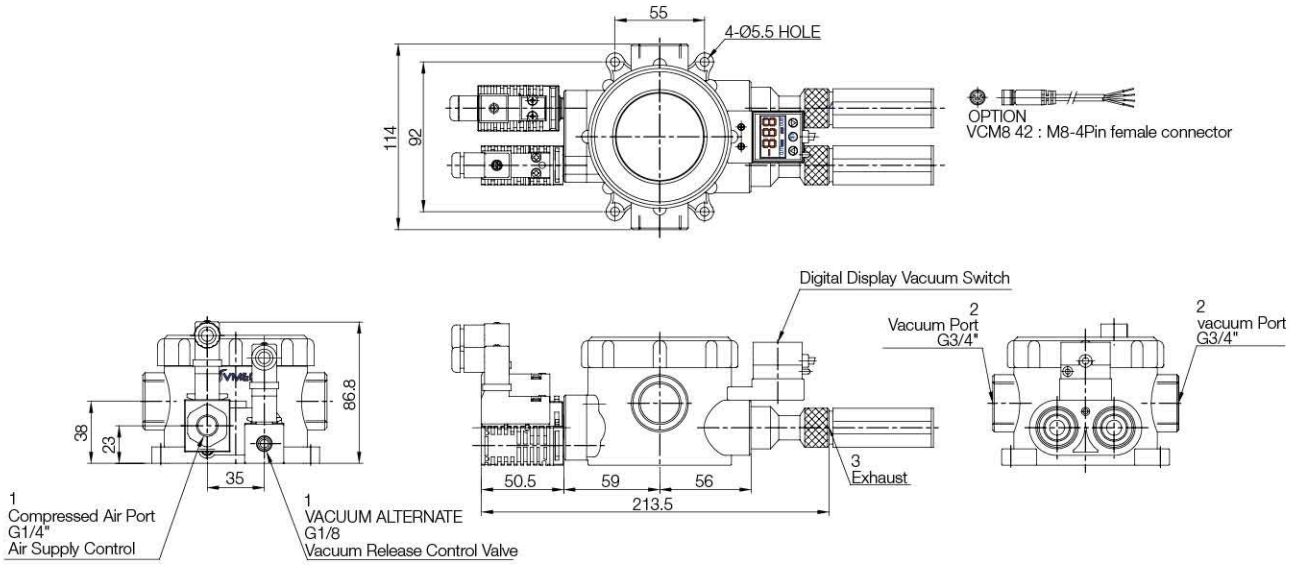

Performance data

VTC3032

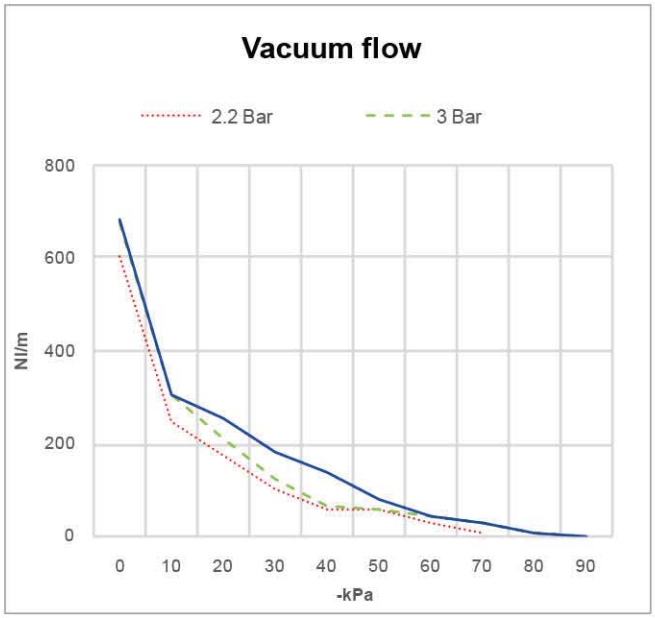

※ Vacuum flow at different vacuum level

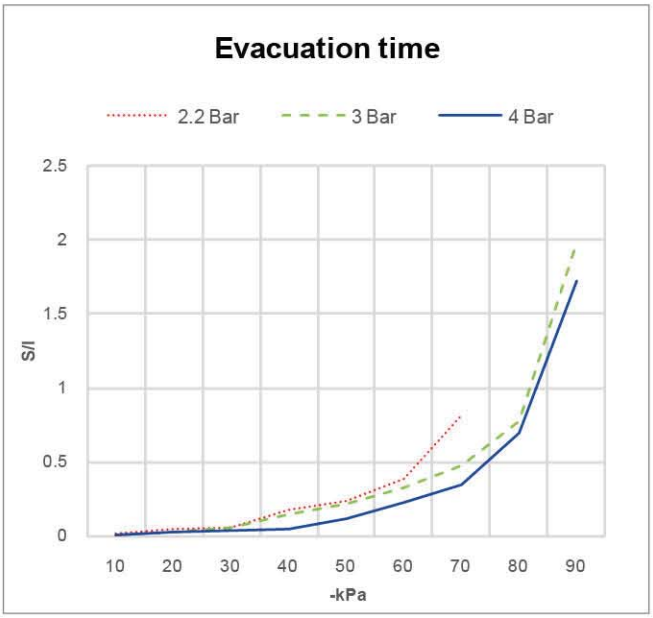

※ Time to evacuate a volume at different vacuum level

VTCL3032

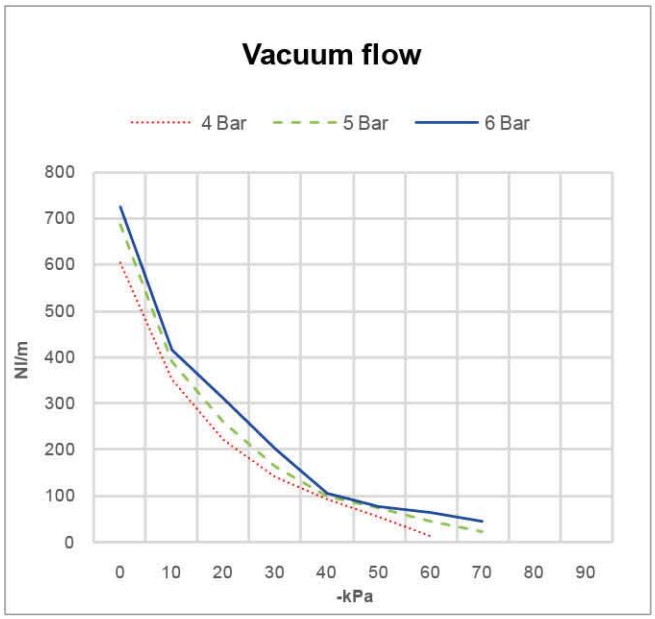

※ Vacuum flow at different vacuum level

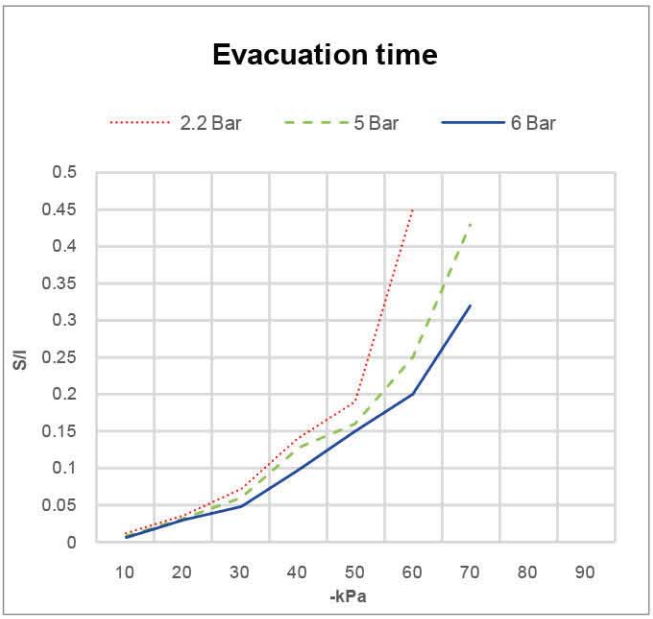

※ Time to evacuate a volume at different vacuum level

Performance data

VTC3022

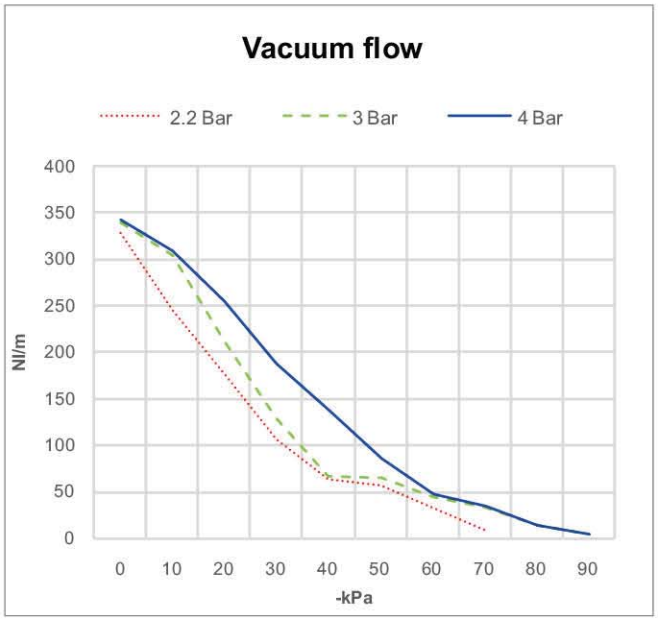

※ Vacuum flow at different vacuum level

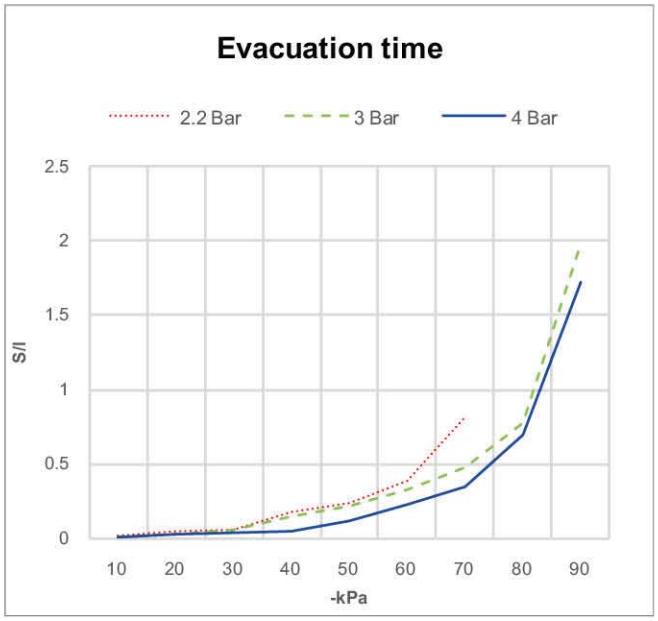

※ Time to evacuate a volume at different vacuum level

VTCL3022

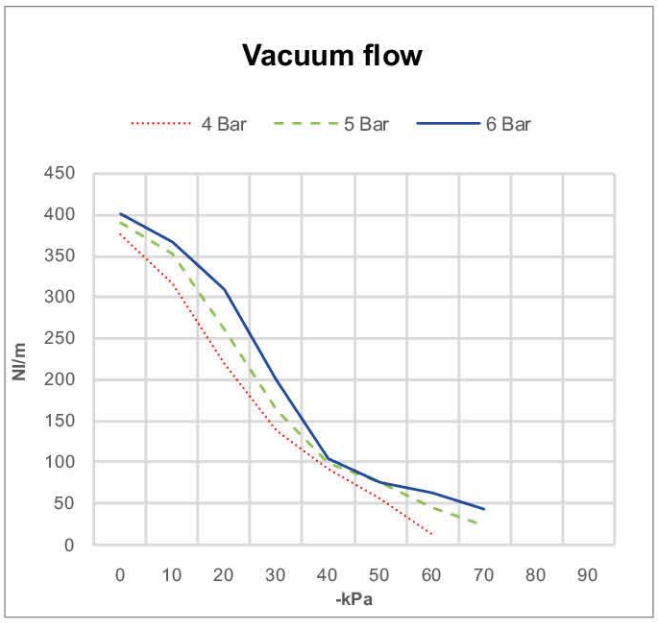

※ Vacuum flow at different vacuum level

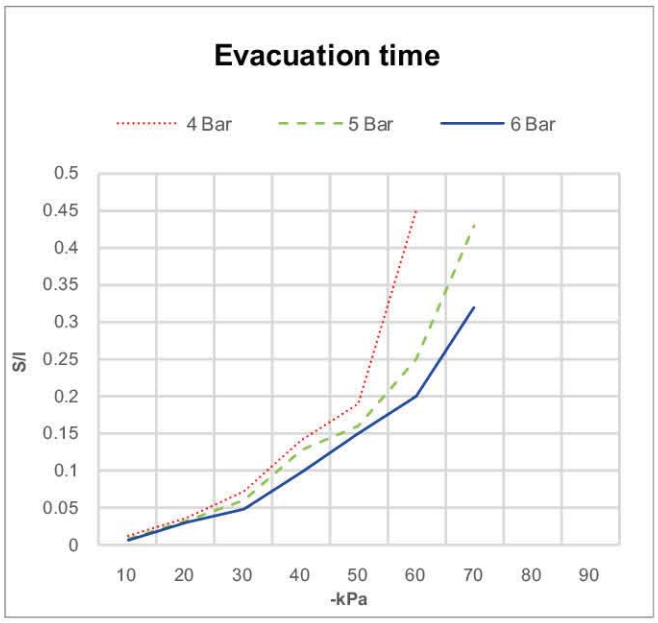

※ Time to evacuate a volume at different vacuum level

VTC3134 / VTCL3134

Features and Strengths

- Highly operational reliability despite fluctuating or low compressed-air pressure
- Integrated pleated filter with high dirt capacity & Auto-cleaning system
- Optional Air-Saving Kit available to minimize energy consumption
- Quick response time
- Patented design

Specifications

Description	VTC3134	VTCL3134
Max. Vacuum level	-92 kPa	-75 kPa
Open Vacuum flow	1364 Nl/min	1448 Nl/min
Max. Feed pressure	7 bar	7 bar
Temperature	-20 ~ 80 °C	-20 ~ 80 °C
Noise level	50 ~ 60 dbA	50 ~ 60 dbA
Weight	1,113 g	1,111 g

Vacuum Flow

Model	Max. vacuum (-kPa)	Feed Pressure (bar)	Vacuum flow (Nl/min) at different vacuum levels (-kPa)									
			0	10	20	30	40	50	60	70	80	90
VTC3134	75	2.2	1208	490	352	212	126	114	66	18	-	-
	92	3.0	1352	608	424	256	132	128	88	66	26	7.6
	92	4.0	1364	616	510	376	276	172	93	69	28	8.4
VTCL3134	60	4.0	1208	688	440	280	184	112	27	-	-	-
	70	5.0	1376	784	520	328	200	150	92	45	-	-
	75	6.0	1448	828	616	400	208	152	128	88	-	-

Evacuation Time

Model	Feed Pressure (bar)	Air Consumption (Nl/min)	Evacuation time in sec / liter to reach different vacuum levels (-kPa)								
			10	20	30	40	50	60	70	80	90
VTC3134	2.2	388	0.005	0.02	0.027	0.08	0.1	0.18	0.4	-	-
	3.0	472	0.004	0.018	0.02	0.07	0.09	0.16	0.2	0.3	0.95
	4.0	608	0.003	0.01	0.01	0.02	0.05	0.1	0.15	0.25	0.85
VTCL3134	4.0	280	0.0089	0.023	0.04	0.07	0.09	0.2	-	-	-
	5.0	340	0.0057	0.018	0.03	0.063	0.075	0.1	0.2	-	-
	6.0	416	0.0053	0.015	0.029	0.052	0.071	0.09	0.15	-	-

VTC3133 / VTCL3133

Features and Strengths

- Highly operational reliability despite fluctuating or low compressed-air pressure
- Integrated pleated filter with high dirt capacity & Auto-cleaning system
- Optional Air-Saving Kit available to minimize energy consumption
- Quick response time
- Patented design

Specifications

Description	VTC3133	VTCL3133
Max. Vacuum level	-93 kPa	-75 kPa
Open Vacuum flow	1023 Nl/min	1086 Nl/min
Max. Feed pressure	7 bar	7 bar
Temperature	-20 ~ 80 °C	-20 ~ 80 °C
Noise level	50 ~ 60 dbA	50 ~ 60 dbA
Weight	1,117 g	1,115 g

Vacuum Flow

Model	Max. vacuum (-kPa)	Feed Pressure (bar)	Vacuum flow (Nl/min) at different vacuum levels (-kPa)									
			0	10	20	30	40	50	60	70	80	90
VTC3133	75	2.2	902	368	264	159	94	86	50	14	-	-
	92	3.0	1014	456	318	192	99	96	66	50	19	6
	92	4.0	1023	462	383	282	207	129	70	52	21	6.3
VTCL3133	60	4.0	906	516	330	210	138	84	20.4	-	-	-
	70	5.0	1032	588	390	246	150	112.5	69	34	-	-
	75	6.0	1086	621	462	300	156	114	96	66	-	-

Evacuation Time

Model	Feed Pressure (bar)	Air Consumption (Nl/min)	Evacuation time in sec / liter to reach different vacuum levels (-kPa)								
			10	20	30	40	50	60	70	80	90
VTC3133	2.2	291	0.006	0.03	0.038	0.1	0.14	0.24	0.54	-	-
	3.0	354	0.005	0.02	0.03	0.09	0.12	0.21	0.24	0.4	1.27
	4.0	456	0.004	0.01	0.02	0.03	0.06	0.14	0.2	0.33	1.13
VTCL3133	4.0	210	0.016	0.03	0.05	0.09	0.12	0.26	-	-	-
	5.0	255	0.0085	0.028	0.05	0.08	0.1	0.13	0.26	-	-
	6.0	312	0.0079	0.02	0.04	0.06	0.09	0.12	0.2	-	-

VTC3132 / VTCL3132

Features and Strengths

- Highly operational reliability despite fluctuating or low compressed-air pressure
- Integrated pleated filter with high dirt capacity & Auto-cleaning system
- Optional Air-Saving Kit available to minimize energy consumption
- Quick response time
- Patented design

Specifications

Description	VTC3132	VTCL3132
Max. Vacuum level	-92 kPa	-75 kPa
Open Vacuum flow	682 Nl/min	724 Nl/min
Max. Feed pressure	7 bar	7 bar
Temperature	-20 ~ 80 °C	-20 ~ 80 °C
Noise level	50 ~ 60 dbA	50 ~ 60 dbA
Weight	1,121 g	1,120 g

Vacuum Flow

Model	Max. vacuum (-kPa)	Feed Pressure (bar)	Vacuum flow (Nl/min) at different vacuum levels (-kPa)									
			0	10	20	30	40	50	60	70	80	90
VTC3132	75	2.2	604	245	176	106	62.8	57	33	9.2	-	-
	92	3.0	676	304	212	128	66	64	44	33	12.8	3.8
	92	4.0	682	308	255	188	138	86	46.6	34.6	13.8	4.2
VTCL3132	60	4.0	604	344	220	140	92	56	13.6	-	-	-
	70	5.0	688	392	260	164	100	75	46	23.8	-	-
	75	6.0	724	415	308	200	104	76	64	44	-	-

Evacuation Time

Model	Feed Pressure (bar)	Air Consumption (Nl/min)	Evacuation time in sec / liter to reach different vacuum levels (-kPa)								
			10	20	30	40	50	60	70	80	90
VTC3132	2.2	194	0.011	0.043	0.050	0.170	0.230	0.380	0.810	-	-
	3.0	236	0.010	0.032	0.055	0.150	0.220	0.330	0.480	0.780	1.980
	4.0	304	0.010	0.026	0.037	0.047	0.120	0.230	0.350	0.700	1.720
VTCL3132	4.0	140	0.017	0.037	0.073	0.14	0.19	0.45	-	-	-
	5.0	170	0.014	0.032	0.06	0.128	0.16	0.25	0.43	-	-
	6.0	208	0.012	0.03	0.047	0.098	0.15	0.2	0.32	-	-

Dimension – Basic Pump

[Unit : mm]

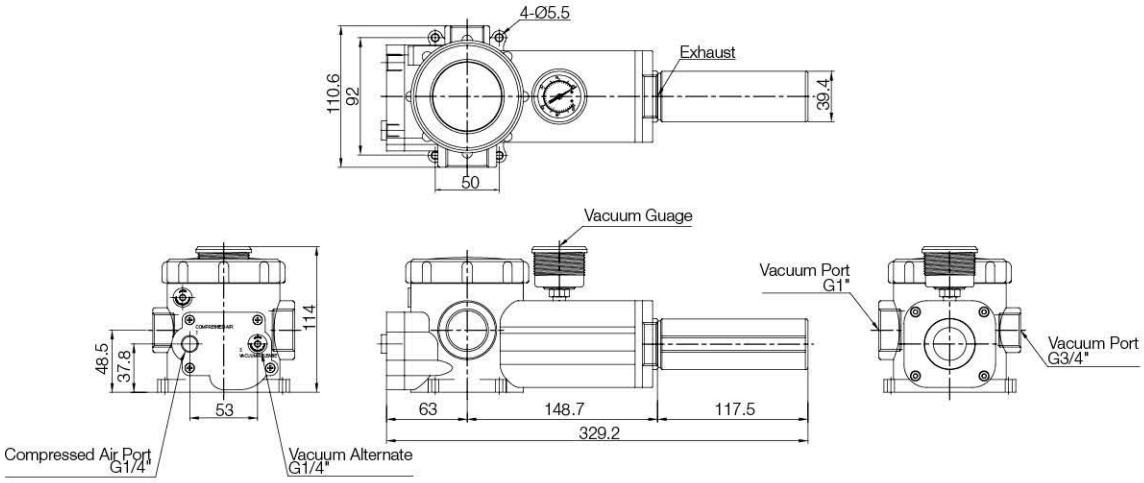

Series VTC 3134.. / VTCL 3134..

Dimensions – with Accessories

[Unit : mm]

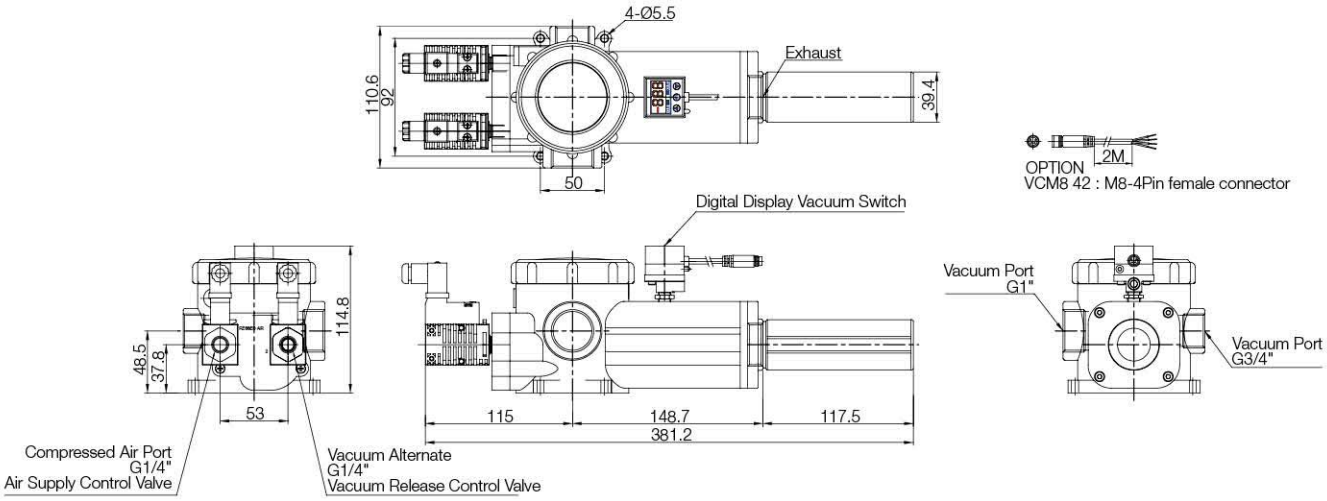

Performance data

VTC3134

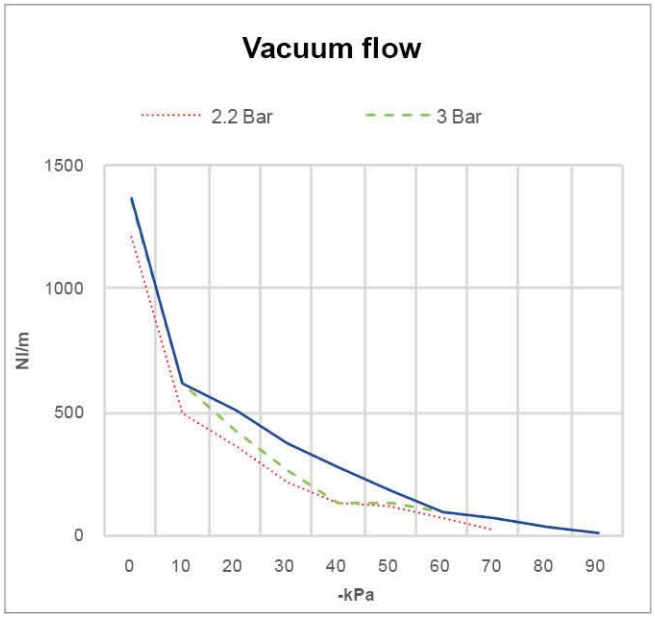

※ Vacuum flow at different vacuum level

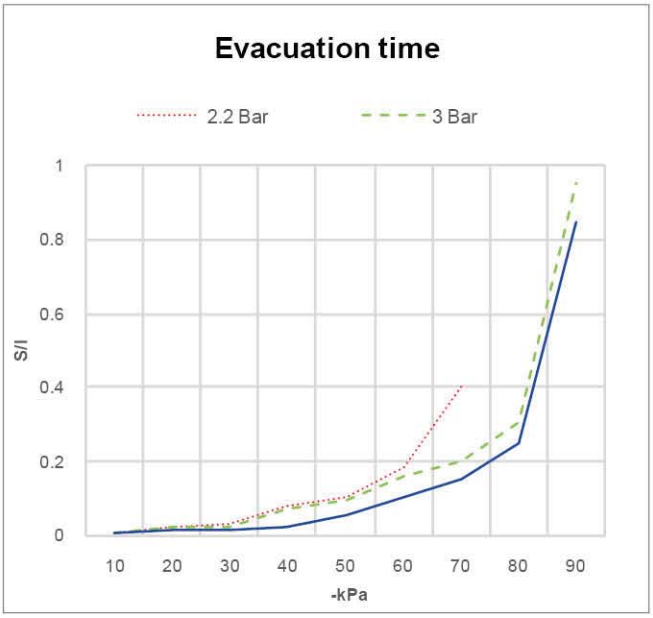

※ Time to evacuate a volume at different vacuum level

VTCL3134

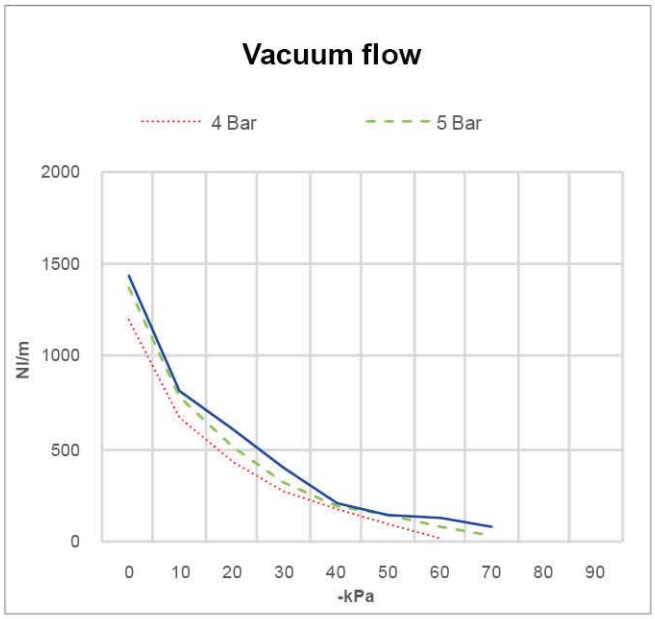

※ Vacuum flow at different vacuum level

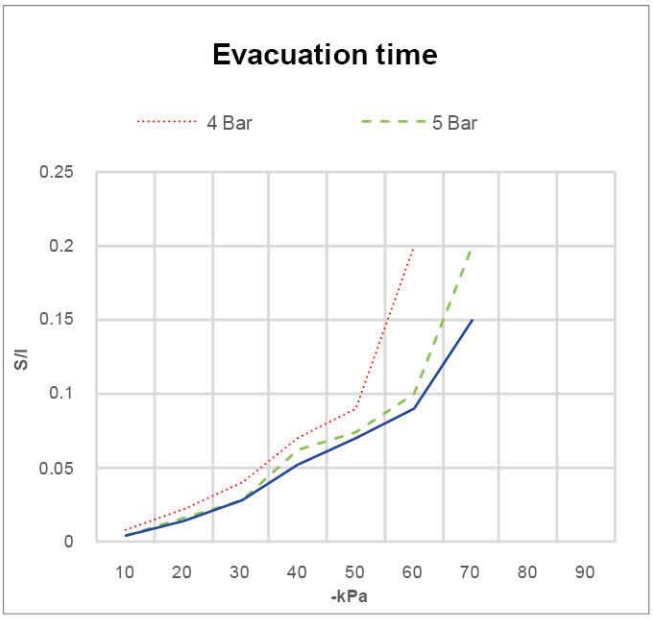

※ Time to evacuate a volume at different vacuum level

Performance data

VTC3133

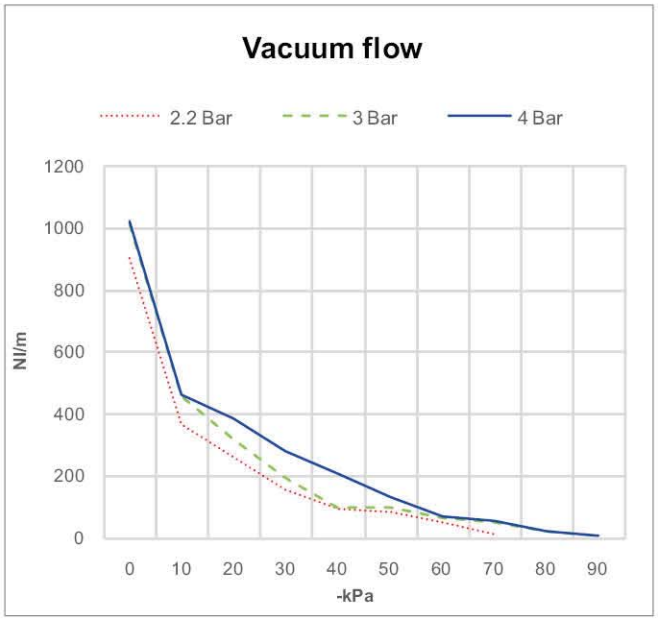

※ Vacuum flow at different vacuum level

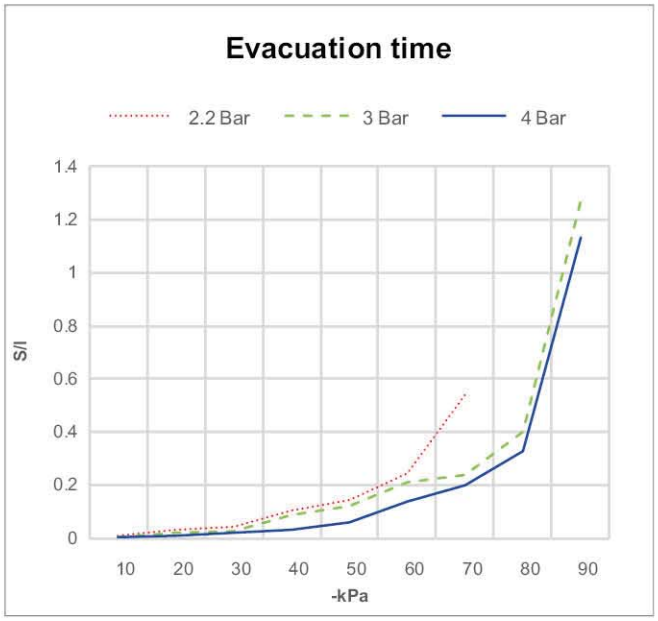

※ Time to evacuate a volume at different vacuum level

VTCL3133

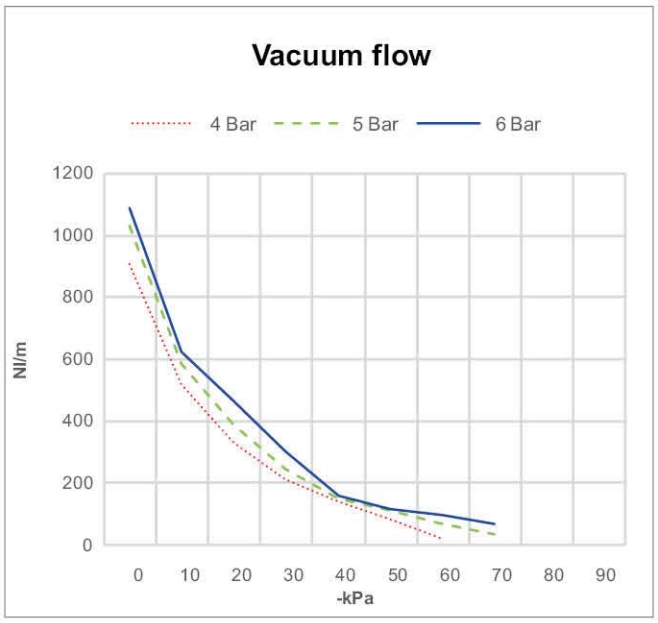

※ Vacuum flow at different vacuum level

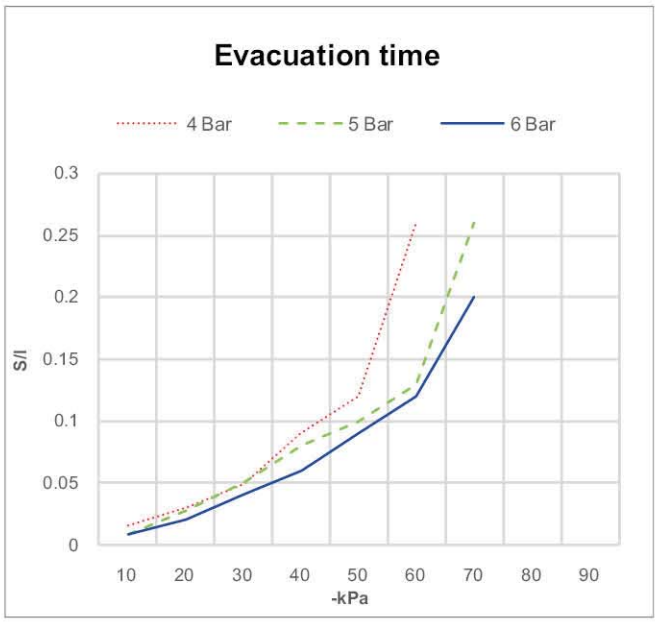

※ Time to evacuate a volume at different vacuum level

Performance data

VTC3132

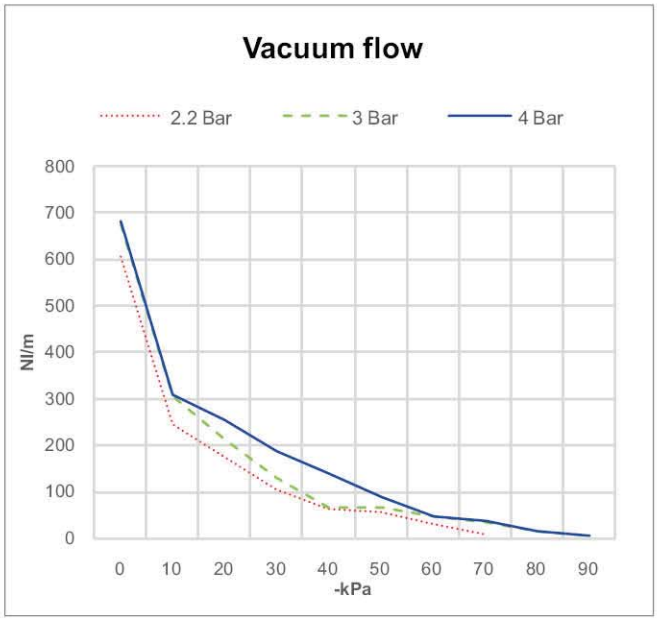

※ Vacuum flow at different vacuum level

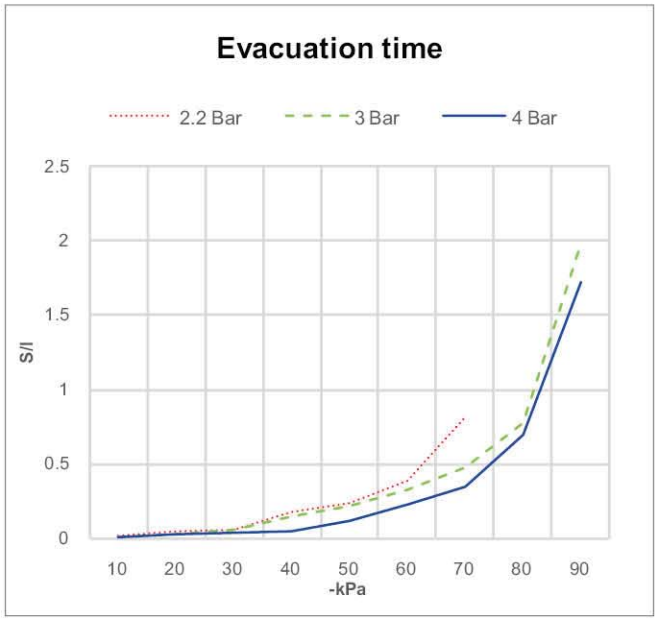

※ Time to evacuate a volume at different vacuum level

VTCL3132

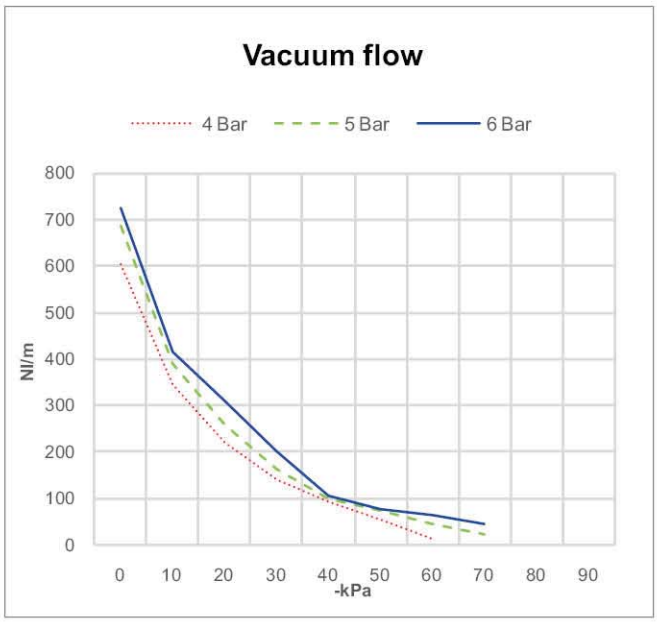

※ Vacuum flow at different vacuum level

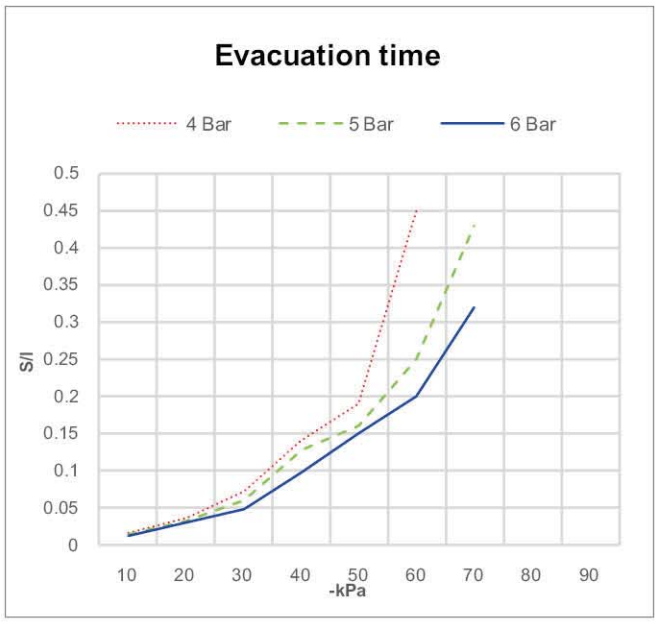

※ Time to evacuate a volume at different vacuum level

VTC3124 / VTCL3124

Features and Strengths

- Highly operational reliability despite fluctuating or low compressed-air pressure
- Integrated pleated filter with high dirt capacity & Auto-cleaning system
- Optional Air-Saving Kit available to minimize energy consumption
- Quick response time
- Patented design

Specifications

Description	VTC3124	VTCL3124
Max. Vacuum level	-92 kPa	-75 kPa
Open Vacuum flow	684 Nl/min	800 Nl/min
Max. Feed pressure	7 bar	7 bar
Temperature	-20 ~ 80 °C	-20 ~ 80 °C
Noise level	50 ~ 60 dbA	50 ~ 60 dbA
Weight	957 g	956 g

Vacuum Flow

Model	Max. vacuum (-kPa)	Feed Pressure (bar)	Vacuum flow (Nl/min) at different vacuum levels (-kPa)									
			0	10	20	30	40	50	60	70	80	90
VTC3124	75	2.2	656	490	352	212	126	114	66	18	-	-
	92	3.0	680	608	424	256	132	128	88	66	26	7.6
	92	4.0	684	616	510	376	276	172	93	69	28	8.4
VTCL3124	60	4.0	752	632	440	280	184	112	27.2	-	-	-
	70	5.0	780	704	520	328	200	150	92	45.2	-	-
	75	6.0	800	732	616	400	208	152	128	88	-	-

Evacuation Time

Model	Feed Pressure (bar)	Air Consumption (Nl/min)	Evacuation time in sec / liter to reach different vacuum levels (-kPa)								
			10	20	30	40	50	60	70	80	90
VTC3124	2.2	388	0.008	0.03	0.05	0.095	0.12	0.018	0.4	-	-
	3.0	472	0.007	0.025	0.048	0.08	0.1	0.016	0.2	0.3	0.95
	4.0	608	0.006	0.015	0.02	0.025	0.06	0.012	0.17	0.26	0.87
VTCL3124	4.0	280	0.01	0.025	0.04	0.07	0.09	0.2	-	-	-
	5.0	340	0.0067	0.02	0.037	0.065	0.075	0.1	0.2	-	-
	6.0	416	0.006	0.02	0.03	0.055	0.073	0.09	0.15	-	-

VTC3123 / VTCL3123

Features and Strengths

- Highly operational reliability despite fluctuating or low compressed-air pressure
- Integrated pleated filter with high dirt capacity & Auto-cleaning system
- Optional Air-Saving Kit available to minimize energy consumption
- Quick response time
- Patented design

Specifications

Description	VTC3123	VTCL3123
Max. Vacuum level	-92 kPa	-75 kPa
Open Vacuum flow	513 Nl/min	600 Nl/min
Max. Feed pressure	7 bar	7 bar
Temperature	-20 ~ 80 °C	-20 ~ 80 °C
Noise level	50 ~ 60 dbA	50 ~ 60 dbA
Weight	946 g	945 g

Vacuum Flow

Model	Max. vacuum (-kPa)	Feed Pressure (bar)	Vacuum flow (Nl/min) at different vacuum levels (-kPa)									
			0	10	20	30	40	50	60	70	80	90
VTC3123	75	2.2	492	367	264	159	94	86	50	14	-	-
	92	3.0	510	456	318	192	99	96	66	50	19	6
	92	4.0	513	462	383	282	207	129	70	52	21	6.3
VTCL3123	60	4.0	564	474	330	210	138	84	20.4	-	-	-
	70	5.0	585	528	390	246	150	112.5	69	33.9	-	-
	75	6.0	600	549	462	300	156	114	96	66	-	-

Evacuation Time

Model	Feed Pressure (bar)	Air Consumption (Nl/min)	Evacuation time in sec / liter to reach different vacuum levels (-kPa)								
			10	20	30	40	50	60	70	80	90
VTC3123	2.2	291	0.01	0.04	0.07	0.13	0.16	0.24	0.54	-	-
	3.0	354	0.009	0.03	0.06	0.1	0.13	0.21	0.26	0.4	1.27
	4.0	456	0.008	0.019	0.03	0.033	0.08	0.16	0.23	0.35	1.17
VTCL3123	4.0	210	0.012	0.029	0.057	0.097	0.127	0.27	-	-	-
	5.0	255	0.009	0.028	0.05	0.083	0.1	0.13	0.26	-	-
	6.0	312	0.009	0.027	0.04	0.06	0.09	0.12	0.2	-	-

VTC3122 / VTCL3122

Features and Strengths

- Highly operational reliability despite fluctuating or low compressed-air pressure
- Integrated pleated filter with high dirt capacity & Auto-cleaning system
- Optional Air-Saving Kit available to minimize energy consumption
- Quick response time
- Patented design

Specifications

Description	VTC3122	VTCL3122
Max. Vacuum level	-92 kPa	-75 kPa
Open Vacuum flow	342 Nl/min	400 Nl/min
Max. Feed pressure	7 bar	7 bar
Temperature	-20 ~ 80 °C	-20 ~ 80 °C
Noise level	50 ~ 60 dbA	50 ~ 60 dbA
Weight	933 g	933 g

Vacuum Flow

Model	Max. vacuum (-kPa)	Feed Pressure (bar)	Vacuum flow (Nl/min) at different vacuum levels (-kPa)									
			0	10	20	30	40	50	60	70	80	90
VTC3122	75	2.2	328	245	176	106	62.8	57	33	9.2	-	-
	92	3.0	340	304	212	128	66	64	44	33	12.8	3.8
	92	4.0	342	308	255	188	138	86	46.6	34.6	13.8	4.2
VTCL3122	60	4.0	376	316	220	140	92	56	13.6	-	-	-
	70	5.0	390	352	260	164	100	75	46	23.8	-	-
	75	6.0	400	366	308	200	104	76	64	44	-	-

Evacuation Time

Model	Feed Pressure (bar)	Air Consumption (Nl/min)	Evacuation time in sec / liter to reach different vacuum levels (-kPa)								
			10	20	30	40	50	60	70	80	90
VTC3122	2.2	194	0.018	0.065	0.108	0.2	0.25	0.395	0.81	-	-
	3.0	236	0.016	0.05	0.07	0.16	0.23	0.34	0.5	0.795	2.01
	4.0	304	0.014	0.029	0.043	0.05	0.13	0.25	0.355	0.71	1.75
VTCL3122	4.0	140	0.018	0.04	0.08	0.145	0.195	0.5	-	-	-
	5.0	170	0.014	0.036	0.075	0.125	0.15	0.2	0.4	-	-
	6.0	208	0.013	0.032	0.06	0.1	0.155	0.18	0.35	-	-

Dimension – Basic Pump

[Unit : mm]

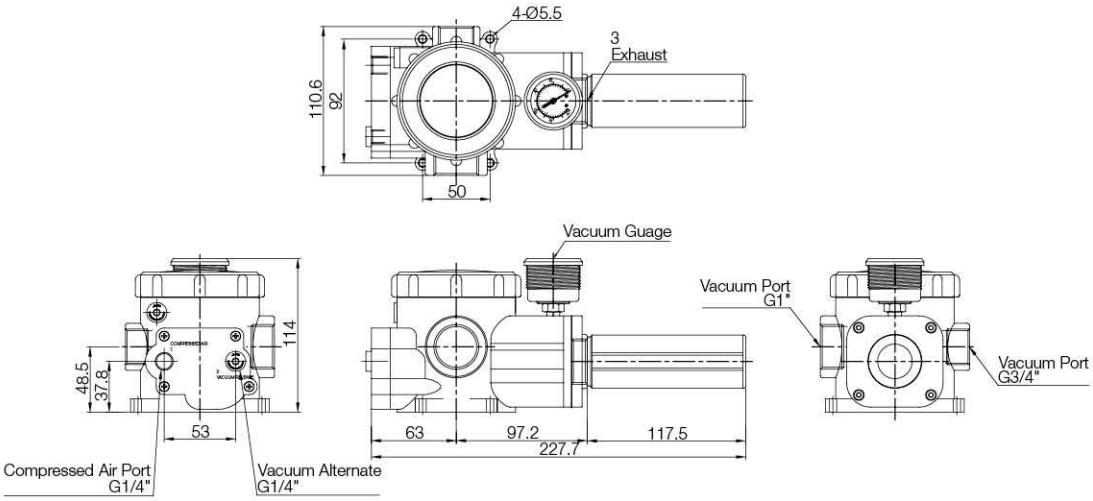

Dimensions – with Accessories

[Unit : mm]

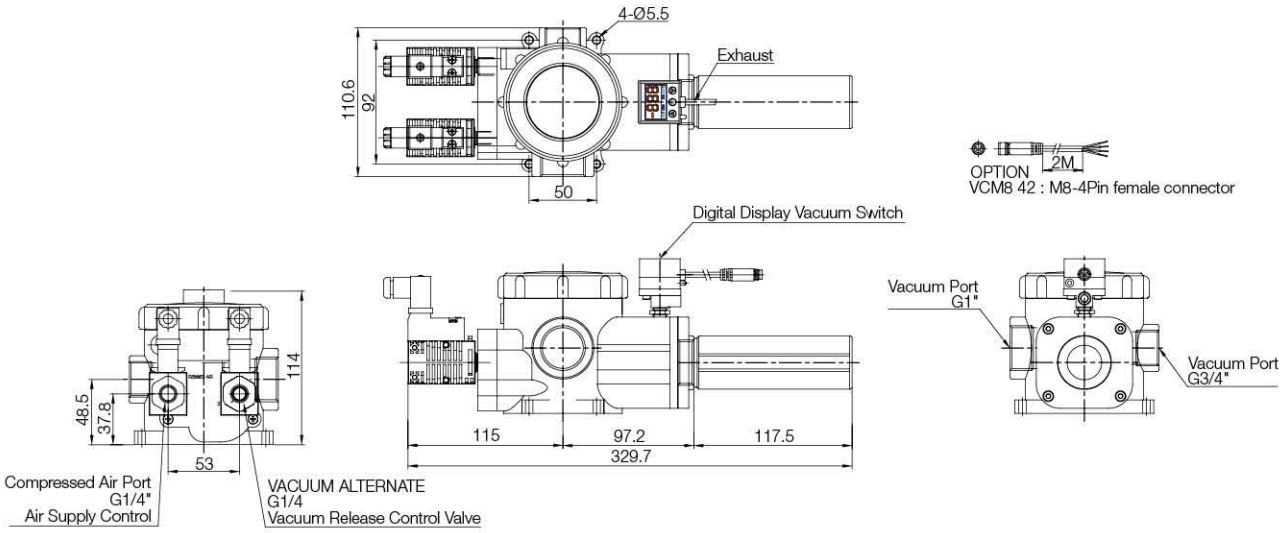

Performance data

VTC3124

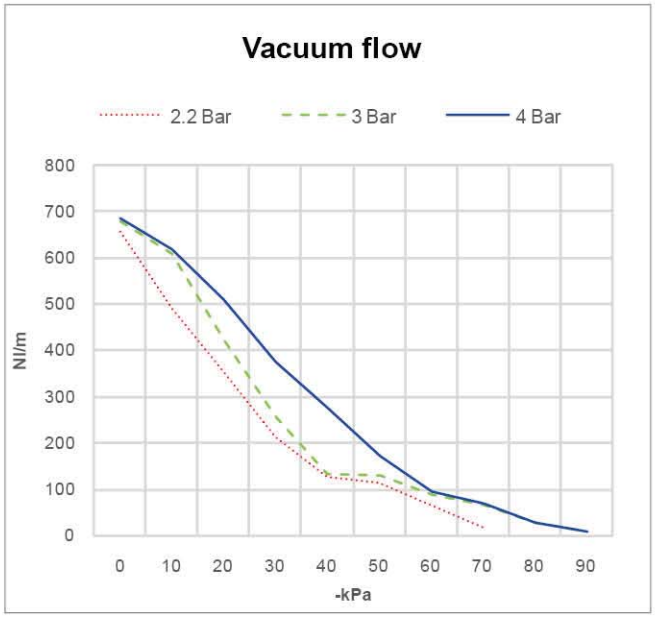

※ Vacuum flow at different vacuum level

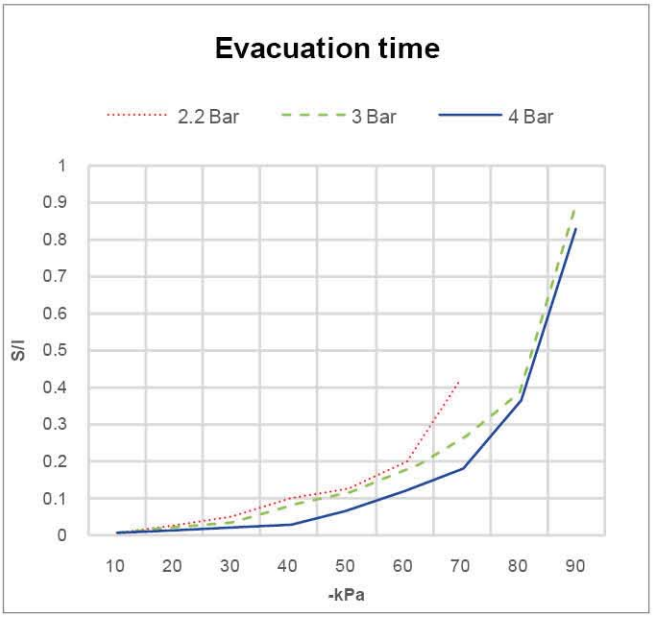

※ Time to evacuate a volume at different vacuum level

VTCL3124

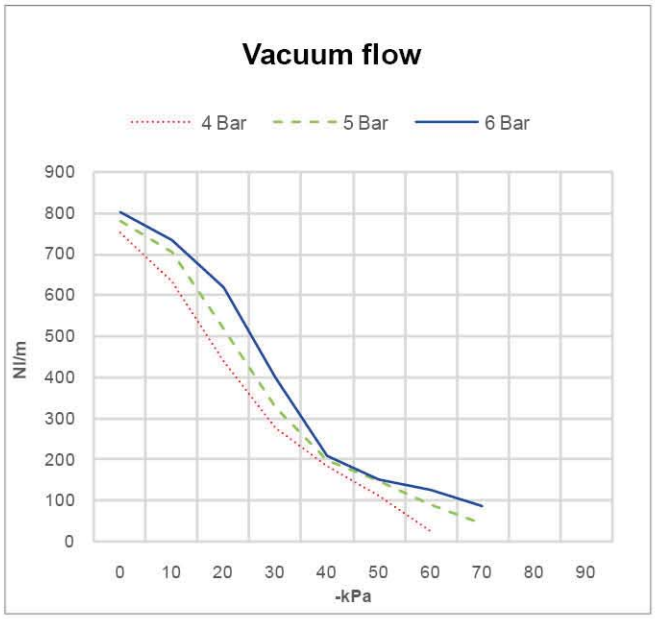

※ Vacuum flow at different vacuum level

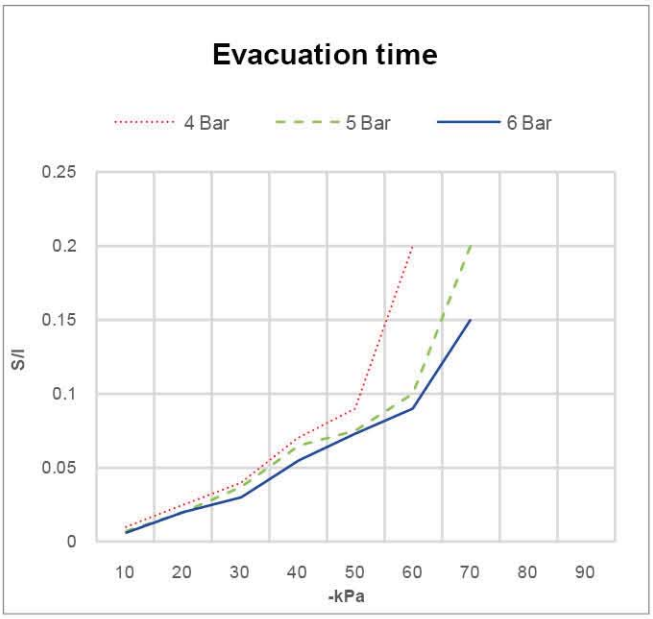

※ Time to evacuate a volume at different vacuum level

Performance data

VTC3123

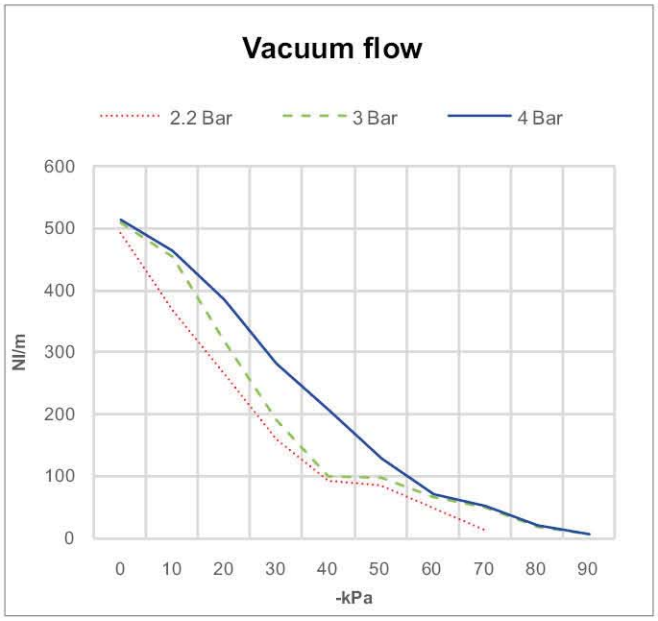

※ Vacuum flow at different vacuum level

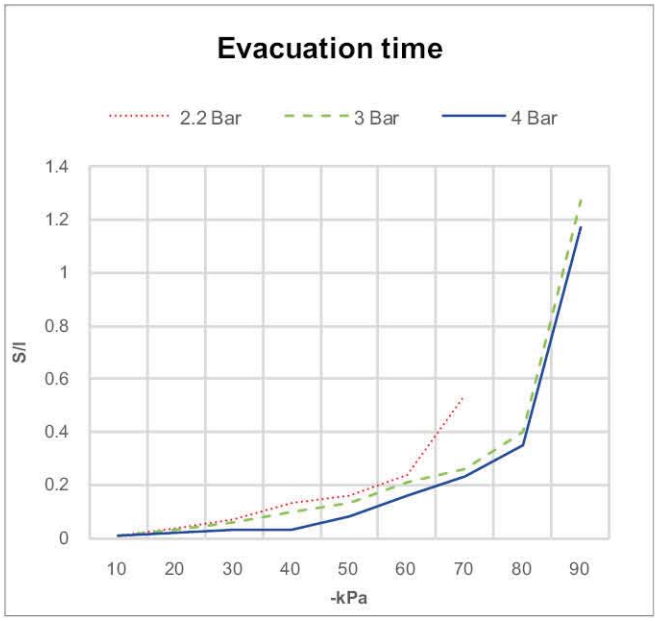

※ Time to evacuate a volume at different vacuum level

VTCL3123

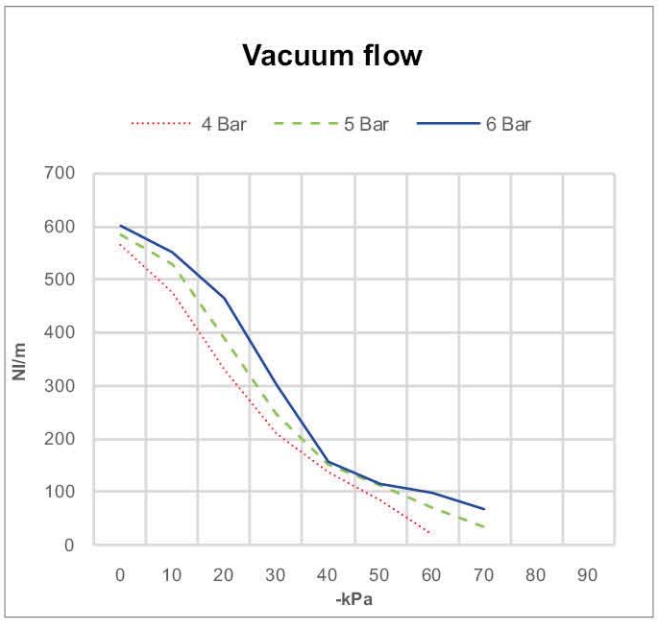

※ Vacuum flow at different vacuum level

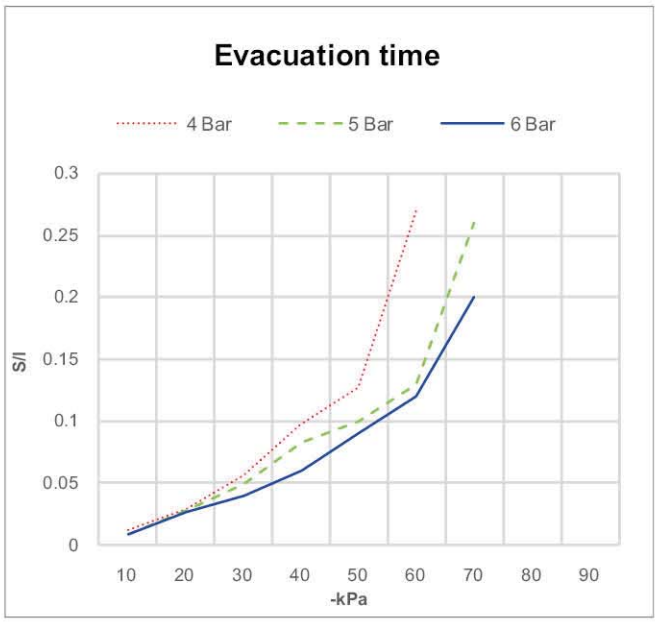

※ Time to evacuate a volume at different vacuum level

Performance data

VTC3122

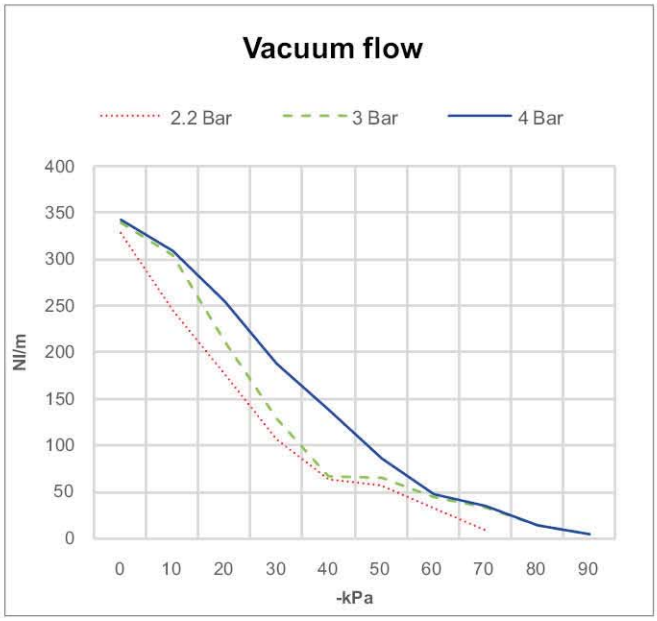

※ Vacuum flow at different vacuum level

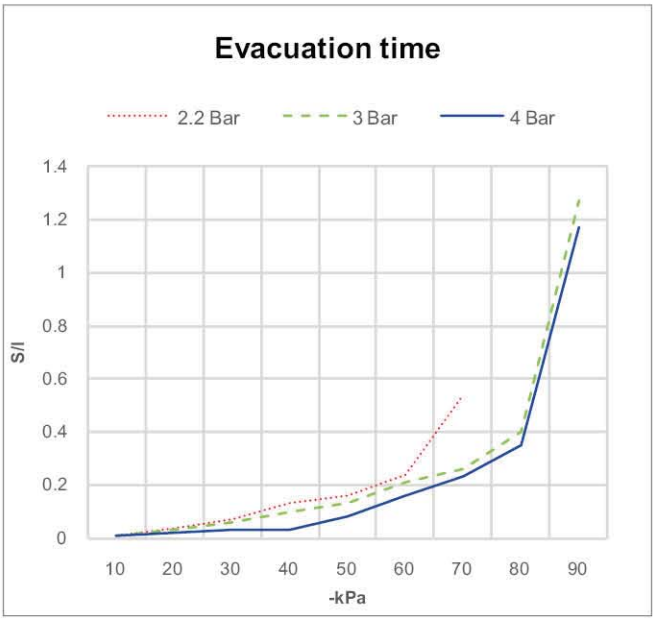

※ Time to evacuate a volume at different vacuum level

VTCL3122

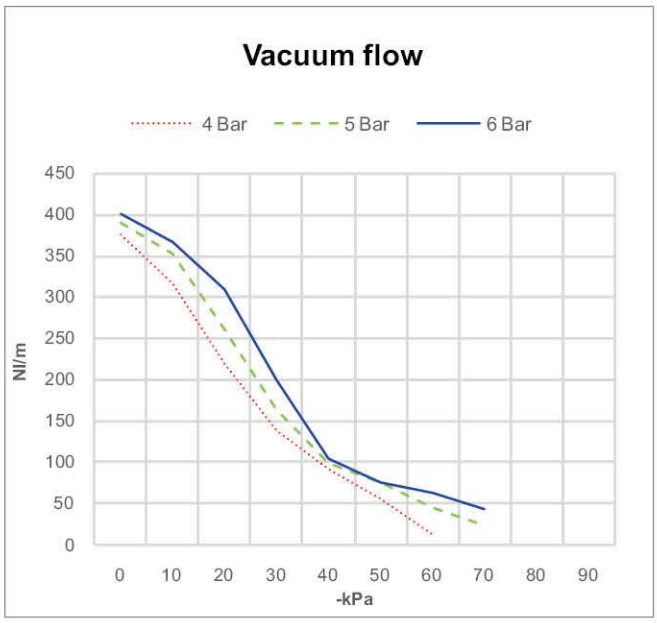

※ Vacuum flow at different vacuum level

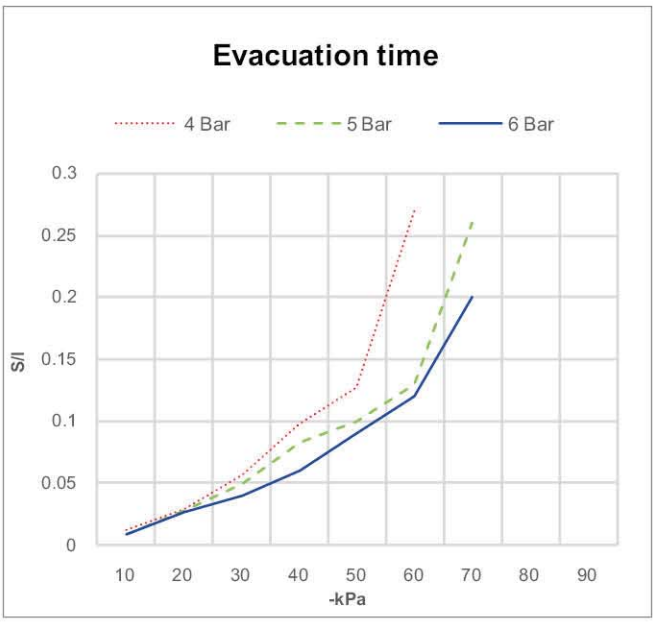

※ Time to evacuate a volume at different vacuum level

Build an Ordering No.

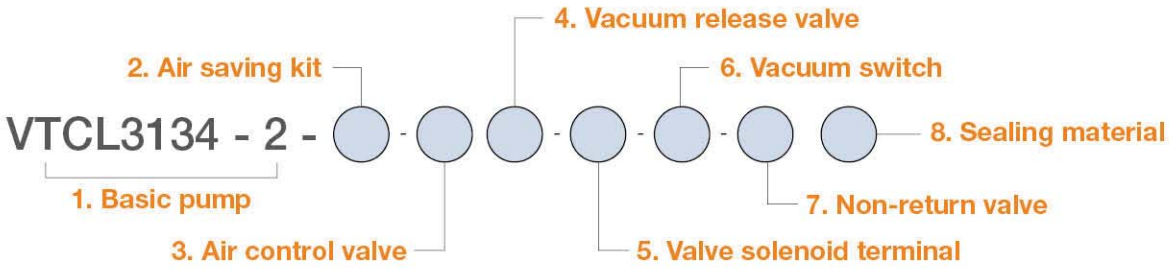

1. Basic pump	Description	Ordering No.
	VTC Midi pump, 3-stage, 1-cartridge, Vacuum filter, Two-fold silencer	VTC3031-2
	VTC Midi pump, 2-stage, 1-cartridge, Vacuum filter	VTC3021-2
	VTC Midi Pump, 3-stage, 2-cartridge, Vacuum filter, Two-fold silencer	VTC3032-2
	VTC Midi pump, 2-stage, 2-cartridge, Vacuum filter	VTC3022-2
	VTCL Midi pump, 3-stage "L" cartridge, 1-cartridge, Vacuum filter, Two-fold silencer	VTCL3031-2
	VTCL Midi pump, 2-stage "L" cartridge, 1-cartridge, Vacuum filter	VTCL3021-2
	VTCL Midi Pump, 3-stage "L" cartridge, 2-cartridge, Vacuum filter, , Two-fold silencer	VTCL3032-2
	VTCL Midi pump, 2-stage "L" cartridge, 2-cartridge, Vacuum filter	VTCL3022-2
	VTC Midi pump, 3-stage, 1-cartridge, Vacuum filter, Plug	VTC3031P-2
	VTC Midi pump, 3-stage, 2-cartridge, Vacuum filter, Plug	VTC3032P-2
	VTCL Midi pump, 3-stage "L" cartridge, 1-cartridge, Vacuum filter, Plug	VTCL3031P-2
	VTCL Midi pump, 3-stage "L" cartridge, 2-cartridge, Vacuum filter, Plug	VTCL3032P-2
	VTC Mega pump, 3-stage, 4-cartridge, Vacuum filter, Silencer	VTC3134-2
	VTC Mega pump, 3-stage, 3-cartridge, Vacuum filter, Silencer	VTC3133-2
	VTC Mega pump, 3-stage, 2-cartridge, Vacuum filter, Silencer	VTC3132-2
	VTC Mega pump, 2-stage, 4-cartridge, Vacuum filter, Silencer	VTC3124-2
	VTC Mega pump, 2-stage, 3-cartridge, Vacuum filter, Silencer	VTC3123-2
	VTC Mega pump, 2-stage, 2-cartridge, Vacuum filter, Silencer	VTC3122-2
	VTCL Mega pump, 3-stage "L" cartridge, 4-cartridge, Vacuum filter, Silencer	VTCL3134-2
	VTCL Mega pump, 3-stage "L" cartridge, 3-cartridge, Vacuum filter, Silencer	VTCL3133-2
	VTCL Mega pump, 3-stage "L" cartridge, 2-cartridge, Vacuum filter, Silencer	VTCL3132-2
	VTCL Mega pump, 2-stage "L" cartridge, 4-cartridge, Vacuum filter, Silencer	VTCL3124-2
	VTCL Mega pump, 2-stage "L" cartridge, 3-cartridge, Vacuum filter, Silencer	VTCL3123-2
	VTCL Mega pump, 2-stage "L" cartridge, 2-cartridge, Vacuum filter, Silencer	VTCL3122-2

2. Air saving kit	Description	Symbol
	No air saving kit	Blank
	Air saving kit without air control valve	AS
	Air saving kit integrated with air control valve	ASV

3. Air control valve	Description	Ordering No.
	No air control valve	Blank
	Air control valve, AC110V	A1
	Air control valve, AC220V	A2
	Air control valve, DC24V	A3
	Double solenoid valve, AC110V	D1
	Double solenoid valve, AC220V	D2
	Double solenoid valve, DC24V	D3

4. Vacuum release valve	Description	Ordering No.
	No vacuum release valve	Blank
	Vacuum release valve, AC110V	R1
	Vacuum release valve, AC220V	R2
	Vacuum release valve, DC24V	R3

5. Valve solenoid terminal	Description	Symbol
	Solenoid Terminal, DIN, No LW	DN
	Solenoid Terminal, DIN, Lamp, No LW	DL
	Solenoid Terminal, Conn, Lamp & 0.3m LW: Only available with DC24V	CL
	Solenoid Terminal, DIN, 2 in 1 BUS cable: Not available with Double Solenoid Valve	2B
	Solenoid Terminal, DIN, 3 in 1 BUS cable: Not available with Double Solenoid Valve	3B
	Solenoid Terminal, DIN, 4 in 1 BUS cable: available with Double Solenoid Valve	4B
	- 3B and 4B are available only with DC24V and S2 or S2P vacuum switch	

Build an Ordering No.

6. Vacuum switch	Description	Ordering No.
	No vacuum switch	Blank
	Digital switch, No analog supply, M8-4pins, NPN	S2
	Digital switch, No analog supply, M8-4pins, PNP	S2P
	Digital switch, No analog supply, Grommet, NPN	SG2
	Digital switch, No analog supply, Grommet, PNP	SG2P
	Digital switch, Analog supply, Grommet, NPN	SG3
	Digital switch, Analog supply, Grommet, PNP	SG3P

7. Non-return valve	Description	Ordering No.
	No non-return valve	Blank
	Non-return valve: No need with Air saving kit	N

8. Sealing material	Description	Ordering No.
	NBR	Blank
	VITON	V
	EPDM	E

Spare Parts – Basic pumps

Model	Description	Weight (g)
VTC3031-2	VTC Midi pump, 3-stage, 1-cartridge, Vacuum filter, Two-fold silencer	412
VTC3021-2	VTC Midi pump, 2-stage, 1-cartridge, Vacuum filter	317
VTC3032-2	VTC Midi Pump, 3-stage, 2-cartridge, Vacuum filter, Two-fold silencer	671
VTC3022-2	VTC Midi pump, 2-stage, 2-cartridge, Vacuum filter	555
VTCL3031-2	VTCL Midi pump, 3-stage, 1- "L" cartridge, Vacuum filter, Two-fold silencer	411
VTCL3021-2	VTCL Midi pump, 2-stage, 1- "L" cartridge, Vacuum filter	316
VTCL3032-2	VTCL Midi Pump, 3-stage, 2- "L" cartridge, Vacuum filter, , Two-fold silencer	670
VTCL3022-2	VTCL Midi pump, 2-stage, 2- "L" cartridge, Vacuum filter	555
VTC3031P-2	VTC Midi pump, 3-stage, 1-cartridge, Vacuum filter, Plug	392
VTC3032P-2	VTC Midi pump, 3-stage, 2-cartridge, Vacuum filter, Plug	631
VTCL3031P-2	VTCL Midi pump, 3-stage, 1-"L" cartridge, Vacuum filter, Plug	392
VTCL3032P-2	VTCL Midi pump, 3-stage, 2-"L" cartridge, Vacuum filter, Plug	630
VTC3134-2	VTC Mega pump, 3-stage, 4-cartridge, Vacuum filter, Silencer	1,113
VTC3133-2	VTC Mega pump, 3-stage, 3-cartridge, Vacuum filter, Silencer	1,117
VTC3132-2	VTC Mega pump, 3-stage, 2-cartridge, Vacuum filter, Silencer	1,121
VTC3124-2	VTC Mega pump, 2-stage, 4-cartridge, Vacuum filter, Silencer	957
VTC3123-2	VTC Mega pump, 2-stage, 3-, Vacuum filter, Silencer	946
VTC3122-2	VTC Mega pump, 2-stage, 2-, Vacuum filter, Silencer	933
VTCL3134-2	VTCL Mega pump, 3-stage, 4-"L" cartridge, Vacuum filter, Silencer	1,111
VTCL3133-2	VTCL Mega pump, 3-stage, 3-"L" cartridge, Vacuum filter, Silencer	1,115
VTCL3132-2	VTCL Mega pump, 3-stage, 2-"L" cartridge, Vacuum filter, Silencer	1,120
VTCL3124-2	VTCL Mega pump, 2-stage, 4-"L" cartridge, Vacuum filter, Silencer	956
VTCL3123-2	VTCL Mega pump, 2-stage, 3-"L" cartridge, Vacuum filter, Silencer	945
VTCL3122-2	VTCL Mega pump, 2-stage, 2-"L" cartridge, Vacuum filter, Silencer	933

Spare Parts – Cartridges

Model	Description	Available model
VC302	Midi Vacuum Cartridge, 2-Stage	VTC3021, VTC3022, VTC3122, VTC3123, VTC3124
VC303	Midi Vacuum Cartridge, 3-Stage	VTC3031, VTC3032, VTC3132, VTC3133, VTC3134
VCL302	Midi Vacuum Cartridge, "L" Series, 2-Stage	VTCL3021, VTCL3022, VTCL3122, VTCL3123, VTCL3124
VCL303	Midi Vacuum Cartridge, "L" Series, 3-Stage	VTCL3031, VTCL3032, VTCL3132, VTCL3133, VTCL3123

Spare Parts – Filter elements

Model	Description
VTFE342	Filter element, Polyester, 5 Micron for 1 cartridge Turtle pump
VTFE502	Filter element, Polyester, 5 Micron for 2~4 cartridges Turtle pump

Spare Parts – Plugs & Silencers

Model	Description	Weight (g)
VCP-M25-302	Holding plug for 2 stage Midi VTC / VTCL vacuum pumps	31.04
VCP-M25-303	Holding plug for 2 stage Midi VTC / VTCL vacuum pumps	59.32
VTTS-M25	Two-Fold Silencer for Midi VTC / VTCL vacuum pumps	78.34
VTS-10	Free flow silencer, G1" for Mega VTC / VTCL vacuum pumps	48.33
VTS-10-A	Free flow silencer, Low noise, G1" for Mega VTC / VTCL vacuum pumps	116.24