# PLF-G

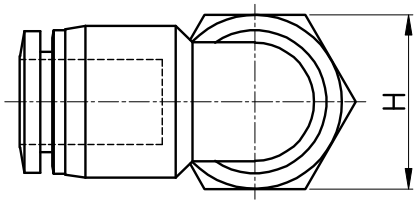


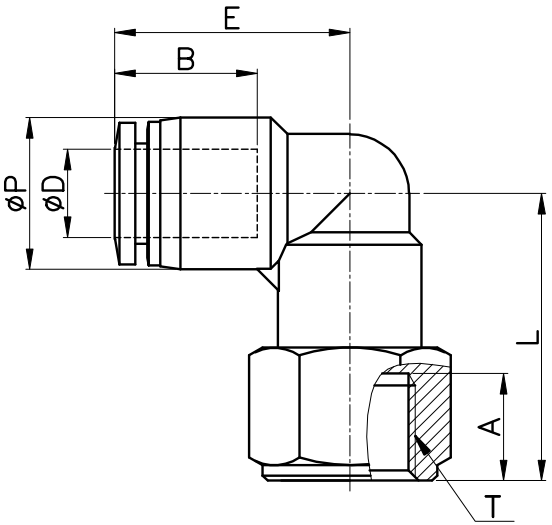


| MODEL | øD | øP | T | L | E | A | B | H (Hex) | ORIFICE | WEIGHT (g) | BOX(EA) |
|---|---|---|---|---|---|---|---|---|---|---|---|
| PLF 04-G01 | 4 | 10.5 | G 1/8 | 22.5 | 18.5 | 9.0 | 14.8 | 14 | 3.0 | 15.0 | 50 |
| PLF 04-G02 | | | G 1/4 | 24.5 | | 11.0 | | 17 | | 21.0 | 50 |
| PLF 06-G01 | 6 | 12.5 | G 1/8 | 24.5 | 20.3 | 9.0 | 16.4 | 14 | 4.0 | 18.0 | 50 |
| PLF 06-G02 | | | G 1/4 | 26.5 | | 11.0 | | 17 | | 23.0 | 50 |
| PLF 06-G03 | | | G 3/8 | 27.5 | | 12.0 | | 22 | | 36.0 | 50 |
| PLF 08-G01 | 8 | 14.8 | G 1/8 | 26.0 | 22.9 | 9.0 | 18.3 | 14 | 6.0 | 20.0 | 50 |
| PLF 08-G02 | | | G 1/4 | 28.0 | | 11.0 | | 17 | | 26.0 | 50 |
| PLF 08-G03 | | | G 3/8 | 29.0 | | 12.0 | | 22 | | 38.0 | 50 |
| PLF 08-G04 | | | G 1/2 | 31.0 | | 14.0 | | 24 | | 41.0 | 25 |
| PLF 10-G01 | 10 | 17.5 | G 1/8 | 28.5 | 24.6 | 9.0 | 20.2 | 17 | 7.0 | 34.0 | 25 |
| PLF 10-G02 | | | G 1/4 | 28.5 | | 11.0 | | 17 | | 32.0 | 25 |
| PLF 10-G03 | | | G 3/8 | 29.5 | | 12.0 | | 22 | | 44.0 | 25 |
| PLF 10-G04 | | | G 1/2 | 31.5 | | 14.0 | | 24 | | 45.0 | 20 |
| PLF 12-G02 | 12 | 20.5 | G 1/4 | 31.4 | 28.7 | 11.0 | 22.9 | 19 | 10.0 | 40.0 | 20 |
| PLF 12-G03 | | | G 3/8 | 32.4 | | 12.0 | | 22 | | 49.0 | 20 |
| PLF 12-G04 | | | G 1/2 | 34.4 | | 14.0 | | 24 | | 51.0 | 20 |