PL

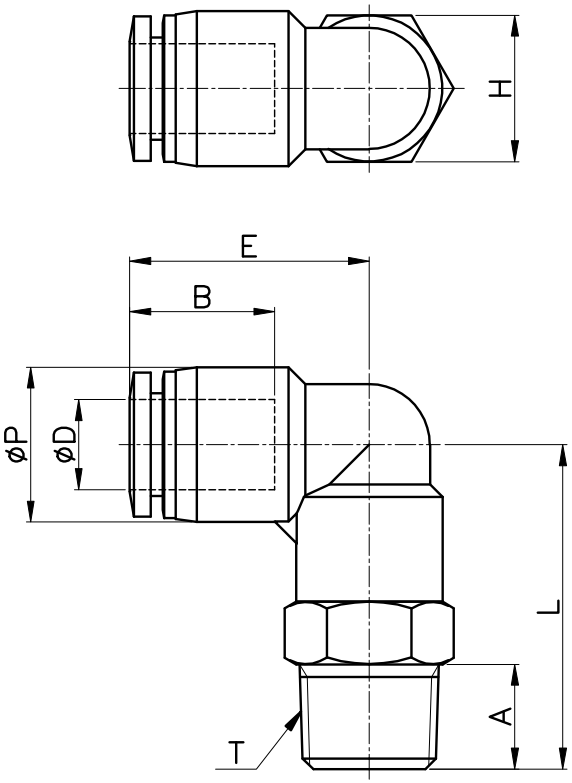

MODEL	ØD	ØP	T	L	E	A	B	H (Hex)	ORIFICE	WEIGHT (g)	BOX(EA)
PL 04–M5	4	10.5	M5*0.8p	20.5	18.5	4.0	14.8	10	2.5	6.0	100
PL 04–M6			M6*1.0p	20.6		4.1		10	3.0	8.0	100
PL 04–01			R 1/8	24.5		8.0		10		10.0	100
PL 04–02			R 1/4	26.5		10.0		14		15.0	100
PL 04–03			R 3/8	27.5		11.0		17		26.0	50
PL 06–M5	6	12.5	M5*0.8p	22.5	20.3	4.0	16.4	12	2.5	7.0	100
PL 06–M6			M6*1.0p	22.6		4.1		12	3.0	12.0	100
PL 06–01			R 1/8	26.5		8.0		12	4.0	13.0	100
PL 06–02			R 1/4	29.5		10.0		14		19.0	100
PL 06–03			R 3/8	30.5		11.0		17		27.0	50
PL 06–04			R 1/2	33.5		14.0		21		39.0	50
PL 08–01	8	14.8	R 1/8	28.0	22.9	8.0	18.3	14	6.0	18.0	50
PL 08–02			R 1/4	31.0		10.0		14		22.0	50
PL 08–03			R 3/8	32.0		11.0		17		27.0	50
PL 08–04			R 1/2	35.0		14.0		21		43.0	50
PL 10–01	10	17.5	R 1/8	28.5	24.6	8.0	20.2	17	6.0	26.0	50
PL 10–02			R 1/4	31.5		10.0		17	8.0	28.0	50
PL 10–03			R 3/8	32.5		11.0		17		30.0	50
PL 10–04			R 1/2	35.5		14.0		21		48.0	25
PL 12–01	12	20.5	R 1/8	32.4	28.7	8.0	22.9	19	6.0	42.0	25
PL 12–02			R 1/4	34.4		10.0		19	9.0	40.0	25
PL 12–03			R 3/8	35.4		11.0		19	10.0	43.0	25
PL 12–04			R 1/2	38.4		14.0		21		52.0	25
PL 14–03	14	23.0	R 3/8	38.0	31.4	11.0	23.7	22	11.0	50.0	20
PL 14–04			R 1/2	41.0		12.0		22	12.0	60.0	20
PL 16–03	16	25.5	R 3/8	42.8	32.8	11.0	24.1	24	10.0	69.0	20
PL 16–04			R 1/2	45.8		14.0		24	13.0	77.0	20